Air Brake Handbook

| Compressors | Valves | Wheel End Solutions | Air Treatment | Integrated Modules | Electronics |

Bendix

Bendix Spicer
Foundation Brake LLC
A Bendix CVS and Dana Joint Venture

Typical Tractor System Schematic

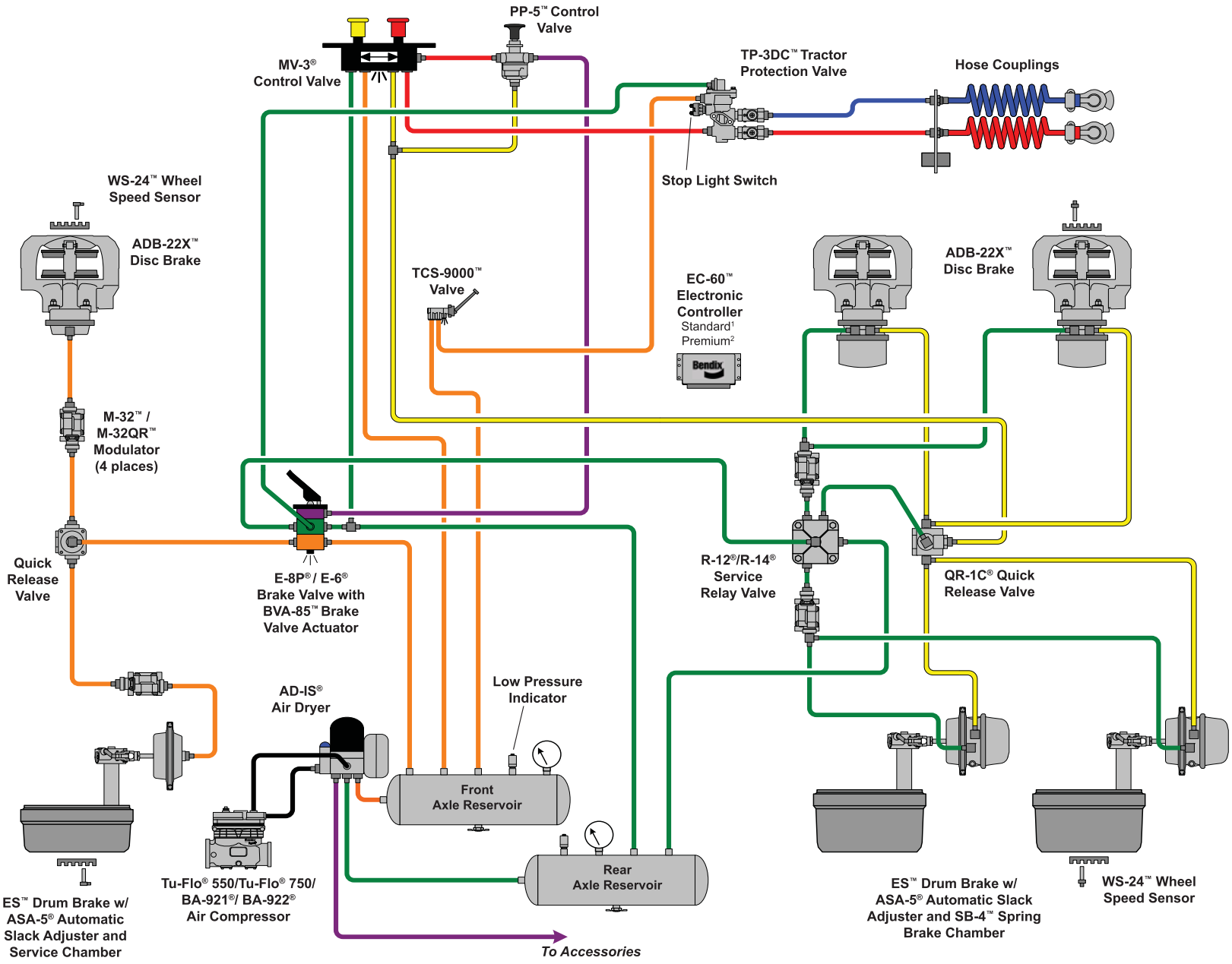

©2009 Bendix Commercial Vehicle Systems LLC • All Rights Reserved

The Air Brake Handbook

Bendix®

©2009 Bendix Commercial Vehicle Systems LLC • All Rights Reserved

Alphabetic Device Index

A-18™ Controller Assy. 42
Actuators 17
AD-2® Air Dryer. 12
AD-4® Air Dryer. 12
AD-9® Air Dryer. 12
AD-IP® Air Dryer 12
AD-IS® Air Dryer Module 12
AD-SP® Air Dryer. 13
AF-3™ In-line Air Filter 13
Air Disc Brakes. 20
ASA-5® Automatic Slack Adjuster 18
BA-921® Air Compressor 8, 9
BA-922® Air Compressor 8-9
BASIC Test Kit 9
Bendix Modules 45
BP-R1® Bobtail Proportioning Relay Valve 22
BVA-85™ Brake Valve Actuator. . 46
BX-2150™ Air Compressor 8
Converter Dolly Brakes. 33
Cyclone DuraDrain™ Trailer Water Separator 13
D-2® Governor 10
DC-4® Double Check Valve . . . 14
DD3™ Safety Actuator 17
Dryer Reservoir Module 12
DS-2™ Double Check and Stop Light Switch. 14
DuraFlo 596™ Air Compressor . 8, 9
E-10™ Brake Valve 15
E-10P™ Brake Valve 15
E-10PR™ Retarder Control Brake Valve 15, 16
E-12™, E-15™ Brake Valves . . . 15
E-14™ Brake Valve 15
E-6® Brake Valve 15
E-7™ Brake Valve. 15
E-8P® Brake Valve 15
EC-30™ ABS/ATC Controller . . . 36
EC-60™ ABS/ATC Controller . . . 36
ESP® Functionality 39
EverFlow® Module 13
FD-3™ Fan Clutch 46
FD-I™ Fan Clutch 46
Inlet Check Valve. 10
Inlet Regulating Valve 10
LP-2™ and LP-3™ Low Pressure Indicators 11
LQ-5™ Bobtail Ratio Valve 22
M-32™ and M-32QR™ Modulators 35
MC-30™ Controller Assy. 42
MV-3® Dash Control Module . . . 29
PE-4™ Control Valve 32
PP-1® and PP-2™ Valves 24
PP-1® Control Valve 34
PP-3™ Control Valve 24
PP-5™ Push-Pull Control Valve. . 27
PP-7™ Control Valve 24
PP-8™ Control Valve 24
PP-DC® Park Control Valve . . . 28
PR-3™ Reservoir Control Valve. . 34
PR-4™ Pressure Protection Valve 14
PuraGuard® QC Oil Coalescing Filter 13
QR-1® Quick Release Valve . . . 21
QR-1C® Quick Release Valve . . 26
QR-L™ Quick Release Valve . . . 21
QRN-2™ Quick Release Valve . . 21
QRV™ Quick Release Valve . . . 21
R-12DC® Relay Valve 23
R-12P™ Relay Valve 23, 34
R-12® Relay Valve 23
R-14® Relay Valve 23
R-6™ Relay Valve. 23
R-7™ Modulating Valve 23
R-8P™ Relay Valve 23
R-8™ Relay Valve. 23
RD-3™ Control Valve 27
RDU™ (Remote Diagnostic Unit) . 44
RE-6NC™ Relay Emergency Valve 34
Reservoirs 11
RV-1™ Pressure Reducing Valve . 14
S-Cam Brakes 19
SB-1™ Spring Brake Actuator . . 17
SC-3™Single Check Valve 11
SC-PR™ Valve 13
SD3™ Roto Safety Actuator . . . 17
SDS-9600™ Trailer Suspension Dump Valve 27
SL-4™ and SL-5™ Stop Lamp Switches 26
Spring Brake Actuators. 17
SR-2™ Spring Brake Valve 31
SR-4™ Spring Brake Valve 31
SR-5™ Spring Brake Valve 31
SRC-7000™ Trailer Spring Brake Valve. 31
ST-1™, ST- 3™ and ST-4™ Safety Valves. 10
SureStroke™ Indicator 18
SV-1™ Synchro Valve. 27, 34
SV-4™ Trailer Release Valve . . . 34
System-Guard® Trailer Air Dryer . 13
TABS-6 Trailer ABS 41
TABS-6 Advanced Trailer ABS . . 41
TABS-6 Advanced MC Trailer ABS 41
TC-2™ Trailer Control Valve . . . 29
TC-6™ Trailer Control Valve . . . 29
TE-1™ Trailer Emergency Stop Light 32
TP-3® Tractor Protection Valve. . 30
TP-3DC™ Tractor Protection Valve 30
TP-4™ Tractor Protection Valve . 30
TP-5™ Tractor Protection Valve . 30
TR-3™ Valve 27
Trailer Control (TC) Valves. . . . 29
Tu-Flo® 550 Air Compressor . . . 8, 9
Tu-Flo® 750 Air Compressor . . . 8, 9
TW-1™, TW-3™ and TW-6™ Control Valves 26
TW-11™ Valve 26
WS-24™ Wheel Speed Sensors . 35
Yaw Stability 39

How to use the Air Brake Handbook

This nine-section handbook provides an introduction to the use and operation of Bendix air brake systems and devices.

Components are introduced and shown with typical system diagrams to show where they are used. As new components are introduced and their function explained, they gradually build up to a complete functioning air brake system.

Partial system-drawings, throughout the manual, assist in explaining of the use of the components. See the front inside cover and the fold-out back cover for examples of vehicle system schematics.

Contents

Device Index 2
General Precautions 4
Section 1: An Overview 5
Overview 5
Section 2: The Charging System 6-14
Compressors 7-9
Compressor Maintenance Guidelines 9
Governors and Components 10
Reservoirs and Components 11
Air Dryers 12-13
Additional Charging System Related Components 14
Section 3: The Control System 15-27
Dual Circuit Brake Valves 15-16
Actuators 17
Slack Adjusters 18
Foundation Brakes: S-Cam and Air Disc 19-20
Quick Release, Ratio Valves 21
Ratio, Proportioning Valves 22
Relay Valves 23
Push-Pull Valves 24
Spring Brake Valves 25
Lever Operated Control Valves 26
Additional Control Valves 26-27
Section 4: Tractor Parking, Trailer Charging/Parking and Emergency Systems 28-32
Park Control Valves 28
Dash Control Modules 29
Trailer Control Valves 29
Tractor Protection Valves 30
Trailer Spring Brake Valves 31-32
Section 5: Converter Dolly Brakes 33-34
Trailer/Converter Dolly Brakes 33-34
Section 6: Antilock Braking Systems 35-
Introduction 35
ABS Components 35-36
Truck and Tractor ABS Operation 36-37
ATC Operation 37
Advanced ABS Operation, Features 38-40
Trailer ABS Components and Operation 41-43
Troubleshooting Truck, Tractor and Trailer ABS . . . 44-45
Section 7:
Additional Systems and Components 46-47
Adaptive Cruise Control 46
Tire Pressure Monitoring Systems 46
Modules 47
Section 8: The Fundamentals of Air Braking 48-58
Friction, Braking Force 48-49
Leverage 50-51
Deceleration 51-52
Compressed Air 53-55
Compressed Air Brakes 55-56
S-Cam and Air Disc Brakes 56
Air Brake System Balance: Pneumatic Systems 57
Air Brake System Balance: Mechanical Systems 58
Section 9:
Air Brake System Troubleshooting Tests 59-62

Bendix Literature 63
About Bendix 64

Front Inside . . . . . Typical Tractor System Schematic
Back Inside . . . . . Typical Truck System Schematic
Fold-in Back . . Typical Tractor System with ESP® Stability
Fold-out Back . . Typical Truck System with ESP® Stability

DIN symbols are used in this handbook.

IMPORTANT

The systems presented in this manual are intended for illustrative purposes only and are not intended to be used for actual vehicle piping.

Air Brake System General Precautions

WARNING! PLEASE READ AND FOLLOW THESE INSTRUCTIONS TO AVOID PERSONAL INJURY OR DEATH:

When working on or around a vehicle, the following general precautions should be observed at all times.

1. Park the vehicle on a level surface, apply the parking brakes, and always block the wheels. Always wear safety glasses.
2. Stop the engine and remove ignition key when working under or around the vehicle. When working in the engine compartment, the engine should be shut off and the ignition key should be removed. Where circumstances require that the engine be in operation, EXTREME CAUTION should be used to prevent personal injury resulting from contact with moving, rotating, leaking, heated or electrically charged components.
3. Do not attempt to install, remove, disassemble or assemble a component until you have read and thoroughly understand the recommended procedures. Use only the proper tools and observe all precautions pertaining to use of those tools.
4. If the work is being performed on the vehicle's air brake system, or any auxiliary pressurized air systems, make certain to drain the air pressure from all reservoirs before beginning ANY work on the vehicle. If the vehicle is equipped with an AD-IS® air dryer system or a dryer reservoir module, be sure to drain the purge reservoir.
5. Following the vehicle manufacturer's recommended procedures, deactivate the electrical system in a manner that safely removes all electrical power from the vehicle.
6. Never exceed manufacturer's recommended pressures.
7. Never connect or disconnect a hose or line containing pressure; it may whip. Never remove a component or plug unless you are certain all system pressure has been depleted.
8. Use only genuine Bendix® replacement parts, components and kits. Replacement hardware, tubing, hose, fittings, etc. must be of equivalent size, type and strength as original equipment and be designed specifically for such applications and systems.
9. Components with stripped threads or damaged parts should be replaced rather than repaired. Do not attempt repairs requiring machining or welding unless specifically stated and approved by the vehicle and component manufacturer.
10. Prior to returning the vehicle to service, make certain all components and systems are restored to their proper operating condition.
11. For vehicles with Antilock Traction Control (ATC), the ATC function must be disabled (ATC indicator lamp should be ON) prior to performing any vehicle maintenance where one or more wheels on a drive axle are lifted off the ground and moving.

Section 1: An Overview

Air Supply

The vehicle's compressor takes in filtered air, either at atmospheric pressure from the outside or already at an increased pressure (e.g. from the engine turbocharger), and compresses it. The compressed air is delivered to the air dryer where water and a small amount of oil is removed. The air then travels into the air reservoirs ("air tanks") - typically delivered to a rear brake system reservoir and a front brake system reservoir as well as any attached trailer reservoirs. For each system, the air pressurizes the reservoir and the air hoses all the way to the next control valve, where the air pressure remains, ready to be used.

A vehicle may use compressed air for many tasks. Some examples are: to provide force for braking, to deliver air to a particular component, to off-load bulk goods, etc.

Normal Braking

When the driver applies the foot brake, a plunger within the foot brake valve moves, opening channels within the valve that allow the air pressure waiting there to pass through and be delivered to the rear and front brake systems. The pressure quickly increases in the brake chambers and applies force to the push rod, transferring the force to the S-Cam or air disc brake. (See page 19 for more about foundation brakes.) Frictional forces slow the wheels and the vehicle comes to a stop. When the brakes are released, the air in the brake chambers is able to be quickly released and enable the vehicle to drive away.

Vehicle Parking

Vehicles are parked using powerful springs, which are part of the spring brake assembly, to engage the brakes and hold the vehicle in position. When the driver prepares to move away and releases the parking brake, the spring force is countered by the introduction of air pressure. An anti-compounding valve in the system design helps prevent the application of both the spring and service brakes together.

Antilock Braking Systems (ABS)

Most commercial vehicles use electronic Antilock Braking System (ABS) to help improve braking when excessive wheel slip, or wheel lock-up, is detected. Bendix® Electronic Control Units (ECUs) use patented technology to monitor wheel speeds (on all wheels equipped with speed sensors) and use ABS modulator valves to adjust or pulse the braking force being applied. These valves operate many times per second during an ABS event. ABS typically improves stability and steerability, and also reduces stopping distances on most surfaces.

In addition to the ABS features above, some advanced ECUs have a drag torque control feature which reduces driven-axle wheel slip (due to driveline inertia) by communicating with the engine's controller and increasing the engine torque.

Antilock Traction Control

In addition to the ABS function, some Bendix ECU models provide an Automatic Traction Control (ATC) feature which can help improve vehicle stability and traction during vehicle acceleration at low speeds.

Electronic Stability Program

The ESP®* functionality of the Bendix Advanced ABS system responds to a wide range of low- to high-friction surface scenarios including rollover, jackknife and loss of control. It is the recommended system for all power vehicles and especially critical for tractors pulling trailers.

In the case of vehicle slide (over-steer or under-steer situations), the system will remove the throttle and then brake one or more of the "four corners of vehicle" (in addition to potentially braking the trailer), thus applying a counter-force to better align the vehicle with an appropriate path of travel. For example, in an over-steer situation, the system applies the "outside" front brake; while in an under-steer situation, the "inside" rear brake is applied.

In the case of a potential roll event, the system will remove the throttle and quickly apply the brakes to slow the vehicle combination below the threshold.

Adaptive Cruise & Braking (ACB)

The Bendix® Wingman™ ACB system provides cruise control and a monitoring system to assist and/or alert the driver. In addition, ACB tracks the vehicles ahead and helps maintain a pre-set following interval. The technology builds on the Bendix® ESP® stability system.

Emergency Braking

In emergency situations where system air pressure is reduced or lost, government regulations require vehicles to meet specified stopping distances. As an example, some straight truck system designs use modulated parking-brake applications to bring the vehicle to a stop.

*ESP is a registered trademark of Daimler and is used by BCVS under license.

Section 2: The Charging System

The charging system consists of:

- An **air compressor,** to pressurize the system
- A **governor**, to control when the compressor needs to build, or stop building, air for the system and also to control the air dryer purge cycle
- An **air dryer,** to remove water and oil droplets from the air
- **Reservoirs** (or "air tanks") to store air to be used for vehicle braking, etc.
- Safety valves to protect against excessive pressure in the system in the event that a charging system component malfunction occurs, e.g. a line blockage
- **Single check valves** to maintain a one-way flow of air into the reservoirs. This arrangement protects the contents from being drained in the event of an upstream loss of pressure
- **Low pressure indicators** to alert the driver whenever a reservoir has less than a pre-set amount of air available

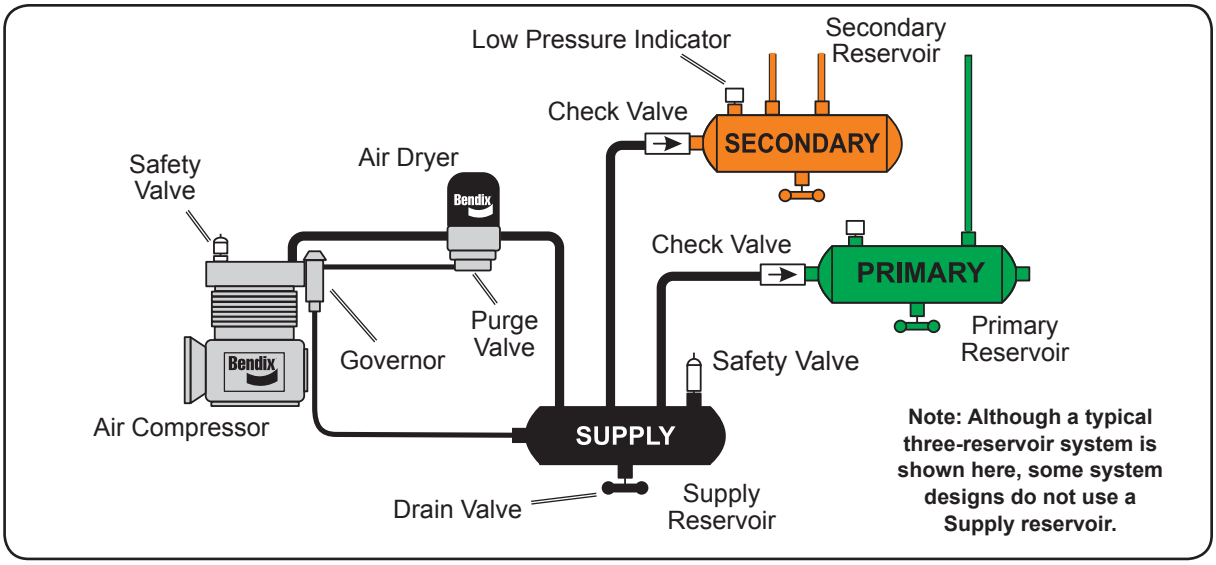

Bendix Air Compressors

The air compressor is the source of energy for the air brake system.

Usually driven by the vehicle engine, the air compressor builds the air pressure for the air brake system. The air compressor is typically cooled by the engine coolant system and lubricated by the engine oil supply. (Certain models have self-lubricated and/or air-cooled versions available.) Note: Air compressor shafts can rotate in either direction.

The vehicle's compressor draws in filtered air, either at atmospheric pressure from the outside (or already at an increased pressure from the engine turbocharger where permitted), and compresses it until system pressure is achieved.

The brake system needs a supply of compressed air between a preset maximum and minimum. The governor (along with a synchro valve for certain Bendix® air compressors) monitors the air pressure in the supply reservoir and controls when the compressor needs to pump air into the air system (also known as the "air build cycle" - the compressor is "running loaded") and when the compressor can simply turn over without building pressure ("running unloaded"). When the air pressure becomes greater than that of the preset "cut-out", the governor controls the unloader mechanism of the compressor, stops the compressor from building air, and causes the air dryer to purge. As the service reservoir air pressure drops to the "cut-in" setting of the governor, the governor returns the compressor back to building air and cycles the air dryer back to air drying mode.

As the atmospheric air is compressed, all the water vapor originally in the air is carried along into the air system (as well as a small amount of the compressor lubricating oil) as vapor.

The **Duty Cycle** is the ratio of time the compressor spends building air, relative to the total engine running time. Air compressors are designed to build air (run "loaded") up to 25% of the time. Higher duty cycles cause conditions (such as higher compressor head temperatures) that may adversely affect air brake charging system performance. These conditions may require additional maintenance due to a higher amount of oil vapor droplets being passed along into the air brake system. Factors that add to the duty cycle are: air suspension, additional air accessories, use of an undersized compressor, frequent stops, excessive leakage from fittings, connections, lines, chambers or valves, etc. See page 9 for compressor maintenance and usage guidelines. Use the Bendix® BASIC test (p/n 5013711) where the amount of oil present in the air brake system is suspected to be above normal.

The discharge line allows the air, water-vapor and oil-vapor mixture to cool between the compressor and air dryer. The typical size of a vehicle's discharge line, (see table on page 9) assumes a compressor with a normal (less than 25%) duty cycle, operating in a temperate climate. See Bendix and/or vehicle or air dryer manufacturer guidelines as needed.

Air dryer inlet temperatures play a key role in air system cleanliness and air dryer performance. When the temperature of the compressed air that enters the air dryer is within the normal range, the air dryer can remove most of the charging system oil. If the temperature of the compressed air is above the normal range, oil as oil-vapor is able to pass through the air dryer and into the air system. Larger diameter discharge lines and/or longer discharge line lengths can help reduce the temperature.

The discharge line must maintain a constant slope down from the compressor to the air dryer inlet fitting to avoid low points where ice may form and block the flow. If, instead, ice blockages occur at the air dryer inlet, insulation may be added here, or if the inlet fitting is a typical 90 degree fitting, it may be changed to a straight or 45 degree fitting to prevent moisture build-up and freezing. For more information on how to help prevent discharge line freeze-ups, see Bendix Bulletins TCH-08-21 and TCH-08-22. Conversely, shorter discharge line lengths or insulation may be required in extreme cold climates to maintain proper dryer operation.

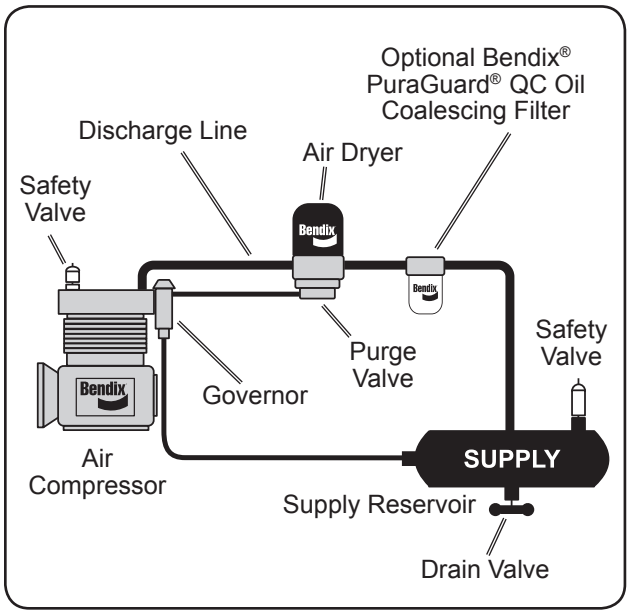

The air dryer contains a filter that collects oil droplets, and a desiccant bed that removes almost all of the remaining water vapor before the compressed air is passed to the air brake service (supply) reservoir. The oil droplets and the water collected are automatically purged at the dryer when the governor reaches its "cut-out" setting.

For vehicles with accessories that are sensitive to small amounts of oil, we recommend installation, downstream of the air dryer, of a Bendix® PuraGuard® QC oil coalescing filter to further minimize the amount of oil present.

See the Bendix Advanced Compressor Trouble-shooting Guide (BW1971) or the compressor's Service Data sheet, available online at www.bendix.com for more information.

Single-Cylinder Compressors

BX-2150™ air compressor

BA-921® air compressor

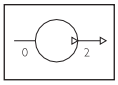

Two-Cylinder Compressors

Tu-Flo® 700 air compressor

Tu-Flo® 501 air compressor

Tu-Flo® 500 air compressor

Tu-Flo® 400 air compressor

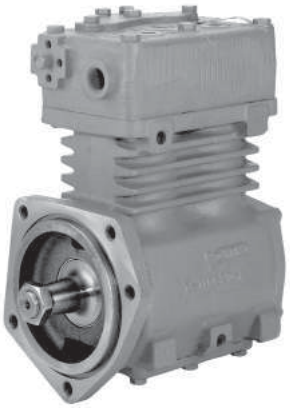

Tu-Flo® 550 air compressor or Tu-Flo® 750 air compressor (exterior view is the same)

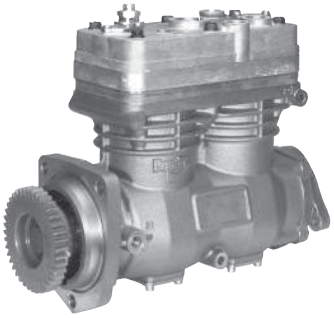

BA-922® air compressor (shown) or DuraFlo 596™ air compressor (exterior view is very similar)

Compressor Comparison by Displacement

	Displacement CFM at 12500 RPM	Cylinders	Engine / self-lubricated avail.?	Water / air-cooled available?	Turbo inlet option?
Tu-Flo® 400 Compressor	7.25	2	Both	Both	Y
BX-2150™ Compressor	9.5	1	Eng.	Water	Y**
Tu-Flo® 500 Compressor	12	2	Eng.	Water	Y
Tu-Flo® 501 Compressor	12	2	Both	Both	Y
Tu-Flo® 550 Compressor	13.2	2	Eng.	Water	Y
Tu-Flo® 700 Compressor	15.5	2	Eng.	Water	Y
BA-921® Compressor	15.8	1	Eng.	Water	Y**
Tu-Flo® 750 Compressor	16.5	2	Eng.	Water	Y
Tu-Flo® 1000 Compressor*	24	4	Both	Both	Y
DuraFlo 596™ Compressor	27	2	Eng.	Water	N
BA-922® Compressor	31.6	2	Eng.	Water	N
Tu-Flo® 1400 Compressor*	32	4	Eng.	Water	Y***

*Special use. e.g. Tank trailer pump-off

**Uses Inlet Check Valve

***Uses an Inlet Regulating Valve

Four-Cylinder Compressors

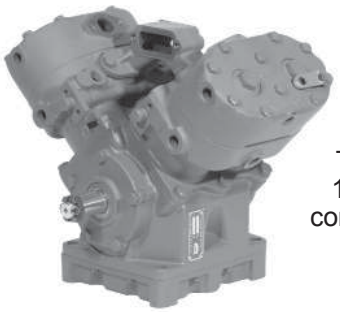

Tu-Flo® 1000 air compressor

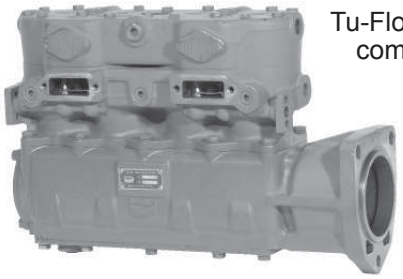

Tu-Flo® 1400 air compressor

For compressor Service Data Sheets, visit www.bendix.com

Maintenance Schedule and Usage Guidelines

Regularly scheduled maintenance is the single most important factor in maintaining the air brake charging system. The table below is an introduction to the maintenance intervals for air brake charging systems. See your compressor and/or air dryer Service Data sheet for more information.

If you are concerned that a compressor may be passing oil, use the Bendix® BASIC Test Kit: Order Bendix P/N 5013711.

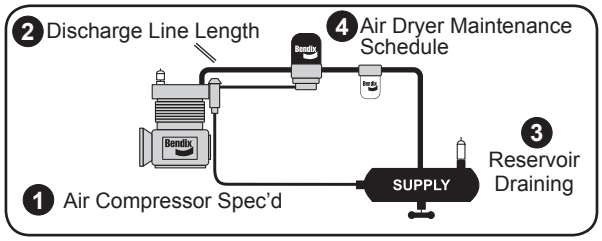

	Low Air Use	Medium Air Use	High Air Use	Very High Air Use
	e.g. Line haul single trailer without air suspension, air over hydraulic brakes.	e.g. Line haul single trailer with air suspension, RV, schoolbus.	e.g. Double/triple trailer, open highway coach, (most) pick-up & delivery, yard or terminal jockey, off-highway, construction, loggers, concrete mixer, dump truck, fire truck.	e.g. City transit bus, refuse, bulk unloaders, low boys, urban region coach, central tire inflation.
	Compressor with less than 15% duty cycle (builds air pressure 15% or less of the engine running time.)	Compressor with less than 25% duty cycle (builds air pressure 25% or less of the engine running time.)	Compressor with up to 25% duty cycle	Compressor with up to 25% duty cycle
	(5 or less axles)	(5 or less axles)	(8 or less axles)	(12 or less axles)
1 Examples of Typical Compressors Spec'd[a]	Bendix® BA-921® air compressor; Bendix® Tu-Flo® 550 air compressor	Bendix® BA-921® air compressor	Bendix® Tu-Flo® 750 air compressor; Bendix® BA-922® air compressor	Bendix® Tu-Flo® 750 air compressor; Bendix® BA-922® air compressor; DuraFlo 596™ air compressor
2	**Discharge line:** 6 ft. @ ½ in. I.D. (oil carry-over control suggested upgrade[b]: 9ft. @ 5/8 in.)	**Discharge line:** 9 ft. @ ½ in. I.D. (oil carry-over control suggested upgrade[b]: 12ft. @ 5/8 in.)	**Discharge line:** 12 ft. @ ½ in. I.D. (oil carry-over control suggested upgrade[b]: 15 ft. @ 5/8 in.)	**Discharge line:** 15 ft. @ 5/8 in. I.D. (oil carry-over control suggested upgrade[b]: 15 ft. @ ¾ in.)
3	Drain Reservoirs Every Month - 90 Days		Drain Reservoirs Every Month	
4	Replace Air Dryer Cartridge Every 3 Years[c]		Replace Every 2 Years[c]	Replace Every Year[c]
Oil Passing Concerns?	Use the BASIC Test Kit: Bendix P/N 5013711 BASIC test acceptable range: ≤ 3 oil units per month.		Use the BASIC Test Kit: Order Bendix P/N 5013711 BASIC test acceptable range: ≤ 5 oil units per month.	

a. Note: Compressor and/or air dryer upgrades are recommended in cases where duty cycle is greater than the normal range (for the examples above). For certain vehicles/applications, where turbo-charged inlet air is used, a smaller size compressor may be permissible.

b. To counter above normal temperatures at the air dryer inlet, (and resultant oil-vapor passing upstream in the air system) replace the discharge line with one of a larger diameter and/or longer length. This helps reduce the temperature of the discharged air. If sufficient cooling occurs, the oil-vapor condenses and can be removed by the air dryer. Discharge line upgrades are not covered under warranty. Note: To help prevent discharge line freeze-ups, shorter discharge line lengths or insulation may be required in cold climates. See Bendix Bulletins TCH-08-21 and TCH-08-22, for more information.

c. With increased air demand the air dryer cartridge needs to be replaced more often.

Governors and Components

The **Governor** monitors the air pressure in the supply reservoir and operates the compressor unloading mechanism to control whether the compressor builds air pressure or not.

The **Bendix® D-2® governor** is an adjustable piston-type valve available preset to a choice of pressure settings. Note: The pressure range between the cut-in and cut-out pressure is designed into the governor and is not adjustable. The D-2® governor may be direct-mounted to the compressor or remote-mounted as desired. Specialized governors are available for vehicles needing a governor adapted to abnormally high or low temperatures, as well as a "weatherproof" model.

The **D-2A™ governor** is a non-adjustable version of the D-2® governor.

The **D-2®/SV-1™ governor module** is a special combination device used with the Bendix® DuraFlo 596™ air compressor to provide the fast-rising unloader signal needed by this compressor.

Safety Valves are used in an air brake system to protect against excessive air pressure buildup and to sound an audible alert. Safety valves are available in both adjustable (e.g. the Bendix® ST-1™ valve) and non-adjustable (e.g. ST-3™, ST-4™ valve) styles, in various pressure settings, and for various port sizes. Maximum service system air pressure allowed by government regulation is typically 150 psi. Various safety valve settings are used at different points in the charging and treatment system.

Specifically designed for use in compressors, ST-4™ safety valves are installed in an extra compressor head discharge port, if available, or in the discharge line near the compressor, to prevent compressor damage in the event of discharge line blockage.

An **Inlet Regulating Valve** (or "IRV") is typically used on multi-cylinder compressors which receive their input air supply from the pressurized side of the engine turbocharger. The IRV, which is generally mounted to the compressor inlet, is designed to regulate compressor inlet pressure to 10 PSI or less. The outlet flange of the IRV can be mounted to all Bendix® Tu-Flo® compressors except the Bendix® Tu-Flo® 300 compressor. The IRV may not be used in conjunction with single cylinder compressors.

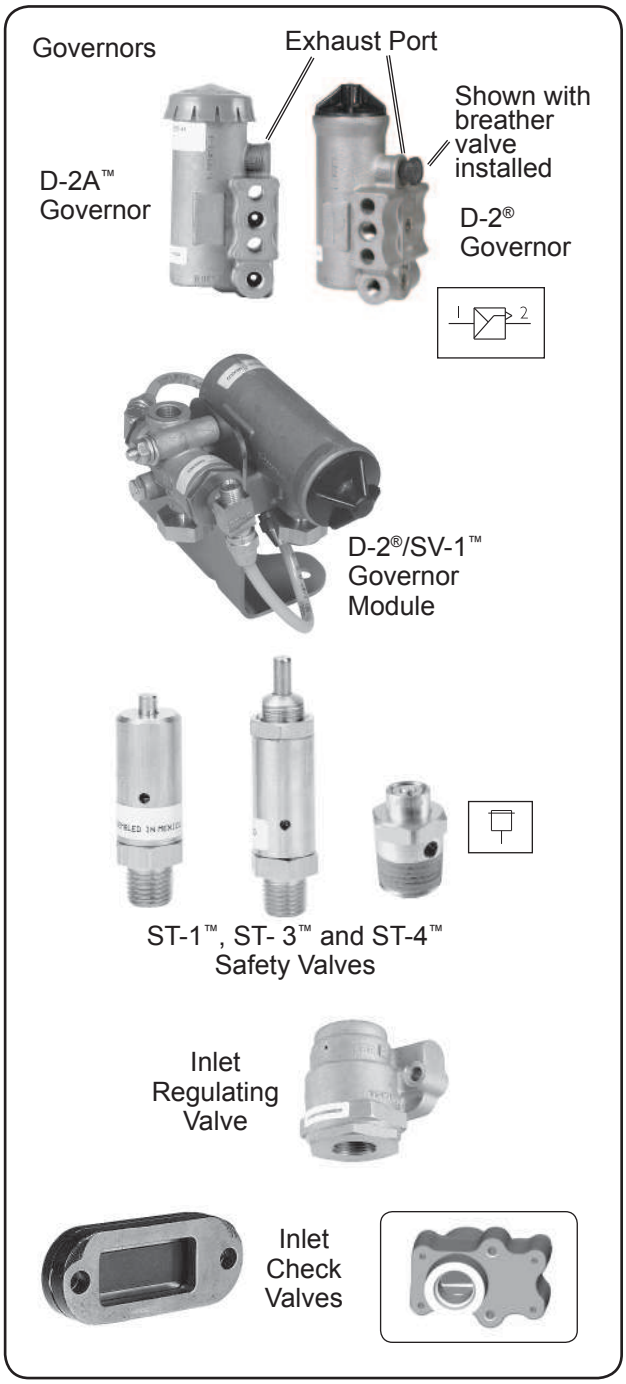

Inlet Check Valves (or "ICV") are used on naturally aspirated compressors to prevent oil mist from entering the inlet line during the unloaded cycle. The inlet check valve either mounts to the intake side of the compressor (and must be used in conjunction with an inlet valve stop or inlet adapter), or may be mounted remotely.

Reservoirs (or "air tanks") serve the air brake system as a storage tank for compressed air. The reservoir size is selected by the vehicle manufacturer to provide an adequate amount of air for use by the braking system and other control devices.

Bendix reservoirs are built in accordance with SAE specifications and are available in various sizes in both single and double compartment design configurations, and are certified to comply with government regulations (such as FMVSS 121).

Reservoir draining devices are installed in air brake reservoirs, and allow liquid contaminants collected to be drained off. Vehicles without air dryers are normally drained each day. Vehicles which have Bendix desiccant air dryers should be drained every 30-90 days. [Tip: The presence of water may indicate that the air dryer cartridge may need to be replaced. Other potential sources of water in the reservoirs are: when shop air has been used to fill the system, an excessive duty cycle, or excessive air leakage.]

Manual draining devices consist of drain cocks which require manual operation at the point at which they are installed. Drain cocks are available in various styles and pipe thread sizes. [Tip: Always drain contents slowly for best results.]

The Bendix® DV-2™ automatic reservoir drain valve is a completely automatic draining device. It is installed directly into the end or bottom drain port of the reservoir and does not require any additional control lines. It is available in either an end-port or bottom-port version, and with or without a (12v or 24v) heater. These are most suitable for systems without a desiccant air dryer.

Single Check Valves

The in-line single check valve allows air flow in one direction only. Several sizes and configurations are available to accommodate various piping arrangements. Single check valves are used in air brake systems to prevent loss of remaining system pressure if another reservoir, or hose etc. upstream in the system fails.

For double check valves and pressure protection valves, see page 14.

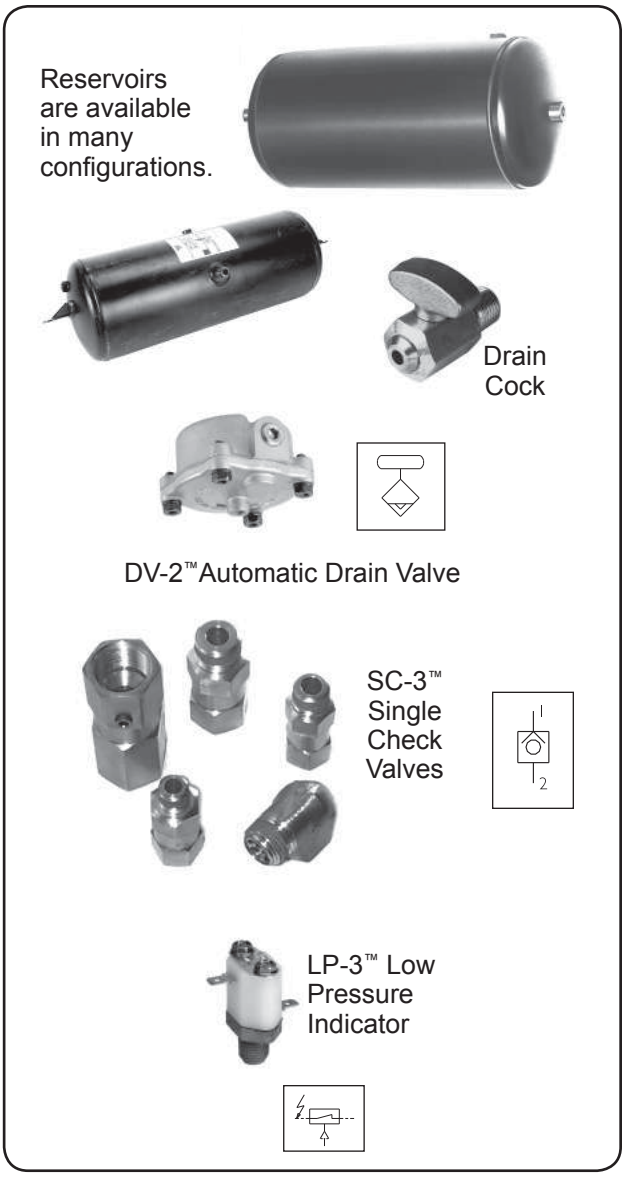

Low Pressure Indicators

Low pressure indicators are pressure-operated electro-pneumatic switches that are designed to complete an electrical circuit and actuate a warning light and buzzer for the driver in the event air pressure in the service brake system is below a minimum level for normal operation. The low pressure indicator is available in various pressure settings, is not adjustable, and is generally used in conjunction with a dash mounted warning lamp or warning buzzer or both.

Air Dryers

The air dryer is an in-line filtration system that removes both water vapor and oil droplets from the compressor discharge air after it leaves the compressor. This results in cleaner, drier air being supplied to the air brake system, and aids in the prevention of air line and component freeze-ups in winter weather.

Air dryers typically use a replaceable cartridge containing a desiccant material and an oil separator. Most of the oil droplets are removed by the oil separator as the air passes into the air dryer. The air then moves through the desiccant material which removes most of the water vapor.

When the air pressure in the supply air tank reaches the required level, the governor makes the compressor stop building air and allows the air dryer's "purge cycle" to begin. During the purge cycle the desiccant material is regenerated (its ability to remove water is renewed) by a reversal of the saturation process. A small amount of dry air passes back through the desiccant material and the water that has been collected, as well as any oil droplets collected by the oil separator, are purged out through the base of the dryer. It is normal to see a small amount of oil around the purge valve.

The air dryer end cover is typically equipped with an integral (12 or 24 volt) heating element.

The **AD-2®, AD-4®, AD-9® and AD-IP® air dryers** are designed with an internal storage ("purge volume") of dry air for the purge cycle.

The **AD-IS® air dryer** is an integral purge air dryer module, which includes a spin-on desiccant cartridge, governor, reservoir, and four pressure protection valves. These have been designed as an integrated air supply system. The **DRM™ module** includes an **AD-IS® integrated solution air dryer**, with all the features just mentioned, along with a reservoir (including a separate purge reservoir section).

"Extended Purge" air dryers are designed with an extra amount of air storage internally that is used to assist in the purge cycle. An example is the **AD-IP® EP air dryer**.

Several Bendix air dryers are available in specialized **"Drop-in"** versions designed especially for air systems that use either the Holset (Cummins) Type E or QE air compressor. These Holset compressors utilize an unusual unloading system that requires that air pressure remain in the discharge line during the entire unloaded cycle of the compressor. For example, the AD-IP® "Drop-in" version is shown here.

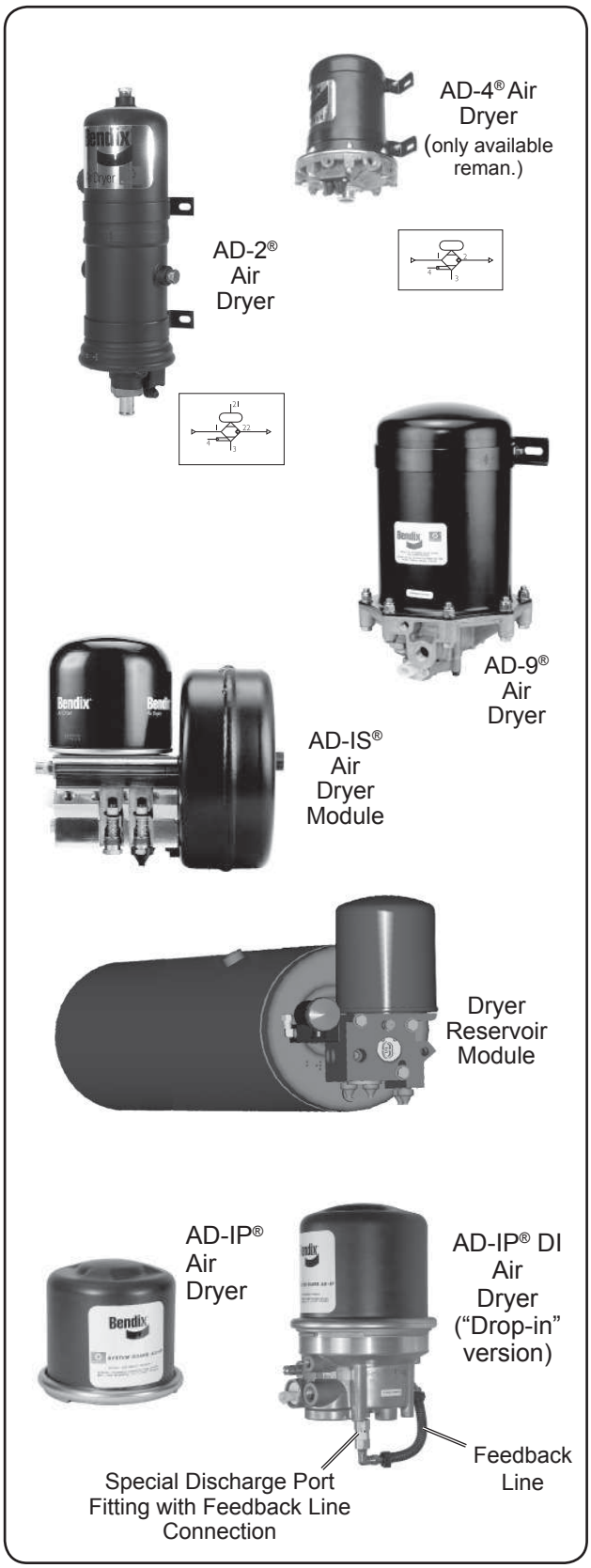

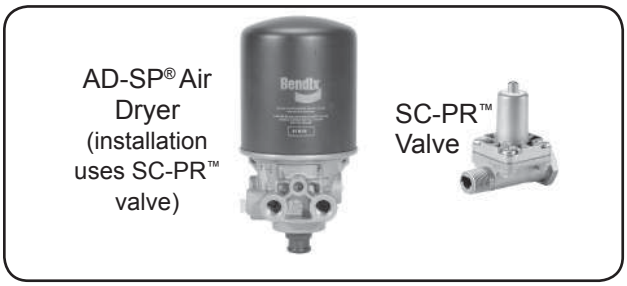

The **AD-SP® air dryer** uses a small amount of air from the supply and front axle (secondary) reservoirs to perform the purge function. Because of this difference, the AD-SP® air dryer is smaller and lighter than air dryers that have their purge volume within the dryer canister. An **SC-PR™ Single Check Protection Valve** is used in conjunction with the AD-SP™ air dryer. The SC-PR™ single check protection valve is a combination of two separate devices, a single check valve and a pressure protection valve that allows limited flow in the opposite direction. It serves as a means of protecting the air pressure in the front axle service reservoir, since it will only allow its air supply to be used to help purge the AD-SP® air dryer if the pressure is above a certain preset level.

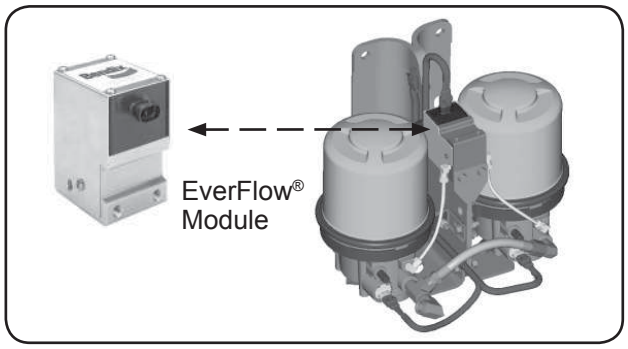

EverFlow® Module

The EverFlow® air dryer module is used for air dryer systems where a vehicle needs a continuous flow of air, such as for bulk unloaders and central tire inflation. As stated earlier, air dryers need to go through a purge cycle periodically to refresh the moisture-removing desiccant material. EverFlow® air dryer modules have two air dryers plumbed in parallel that take turns supplying air, resulting in a continuous, uninterrupted supply.

System-Guard® Trailer Air Dryer

The System-Guard® trailer air dryer removes moisture and contaminates from the trailer air system. It is designed to protect the trailer air brake system when, for short periods of time, the trailer is pulled by vehicles without an air dryer or during times when the trailer is disconnected from the tractor. It does not take the place of a dryer normally located on the power unit, but acts as a buffer to remove moisture during wet times and gives up moisture during dry times.

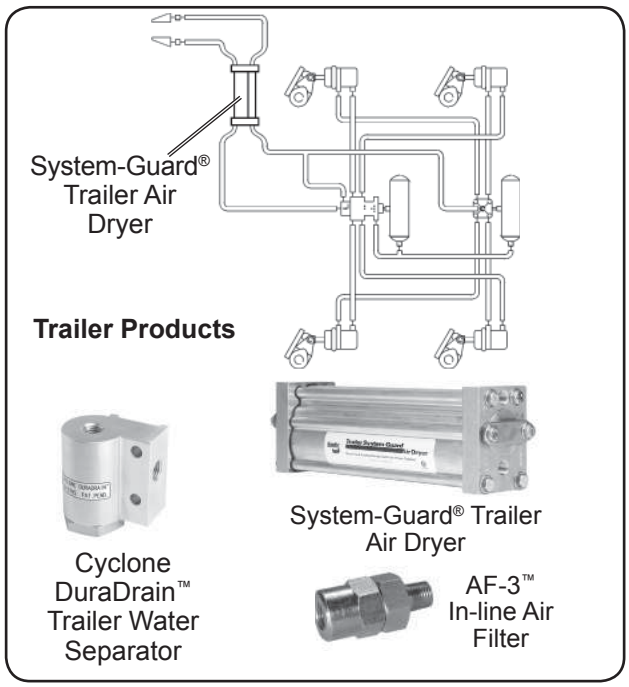

PuraGuard® Filters

The PuraGuard® QC oil coalescing filter (and its predecessor PuraGuard® system filter) are for high air use vehicles such as transit buses and refuse trucks. Installed downstream of the air dryer, these filters use a replaceable filter element mounted within a sump housing to remove oil aerosols before they can enter the air system. A drain valve allows periodic maintenance.

Cyclone DuraDrain™ Trailer Water Separator

The Cyclone DuraDrain™ trailer water separator is installed in the trailer control and/or supply lines near the gladhands. It self-purges liquid contaminates, contains solid contaminants and improves the life of the trailer system components.

AF-3™ In-line Air Filter

The AF-3™ in-line air filter screens out foreign material from trailer air lines.

A **double check valve** is used in the air system when a single function or component must receive air from, or be controlled by, the higher of two sources of pressure. An internal disc or shuttle moves in response to the higher air pressure and allows that air source to flow out of the delivery port. It is recommended that double check valves be mounted so that the shuttle (or disc) operates horizontally.

While not strictly part of the charging system, the **DS-2™ double check valve and stop light switch** (shown on this page) performs the function of both a stop lamp switch and a double check valve. In some vehicle brake systems, it is used to detect air pressure from either brake circuit source, and will operate the stop lamp switch, lighting the stop lamps.

Auxiliary Systems

Vehicle auxiliary components and systems (air actuated wipers, suspension, etc.) requiring compressed air must wait until the reservoirs in the charging system have reached a predefined minimum pressure, sufficient for braking purposes. Once the system has reached the preset minimum, pressure protection valves open to supply auxiliary systems.

Pressure Protection Valves

The **pressure protection valve** is a normally-closed pressure sensitive control valve. These valves can be used in many different applications but are typically used to protect or isolate one reservoir from another, by closing automatically at a preset pressure. The valve is also commonly used to delay the filling of auxiliary reservoirs until a preset pressure is achieved in the primary or braking reservoirs. Pressure protection valves allow air to be "shared" between two reservoirs above the closing setting of the valve. The sharing ceases when pressure drops below the closing pressure of the valve and the reservoirs are then isolated from each other.

The **PR-2™ pressure protection valve** is externally adjustable, while the **PR-4™ pressure protection valve** (shown) has a fixed setting. Both valves are available in various factory preset pressure settings. The **PR-3™ pressure protection valve** differs from the two previously mentioned since its design includes a check valve preventing air return.

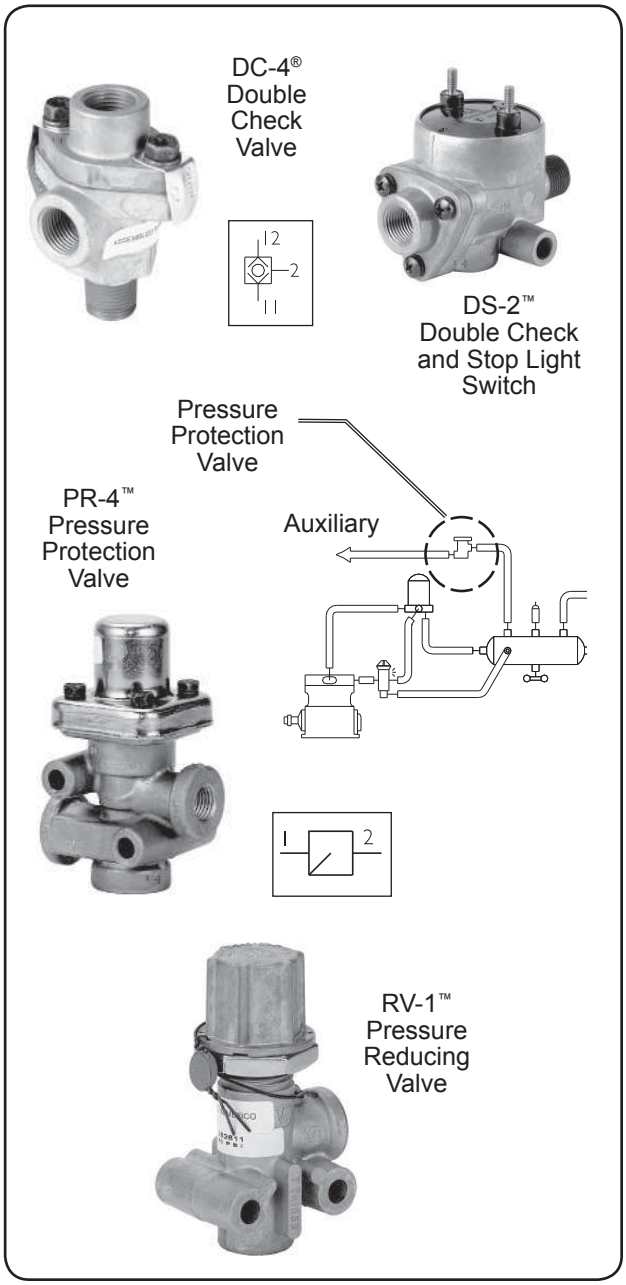

Pressure Reducing Valves

The **pressure reducing valve** is used in various applications where a constant set air pressure lower than supply pressure is required. A typical application is an air operated accessory that requires less than system pressure for operation. The **RV-1™ pressure reducing valve** (shown) is available in a wide range of pressure settings and can be manually adjusted. The **RV-3™ pressure reducing valve** is available with factory preset pressure settings only and cannot be manually adjusted.

Section 3: The Control System

The control system typically consists of:

- A **foot brake valve** and often an additional **hand-operated trailer brake control valve**
- **Brake actuators** or **rotochambers**, to change the applied air pressure into a push-rod force which operates the foundation brakes (air disc, S-Cam, etc.)
- **Quick release valves** to assist in releasing the brakes quickly
- Vehicle parking using **push-pull hand operated valves** and **spring brakes**,
- **Anti-compounding** system design to prevent both the service brakes and the parking brakes being applied at the same time, and
- **Proportioning valves** to adjust braking when a tractor is not pulling a trailer

See the inside front cover for a sample system schematic. The primary (rear) brake circuit is shown in green and the secondary (front) brake circuit is shown in orange.

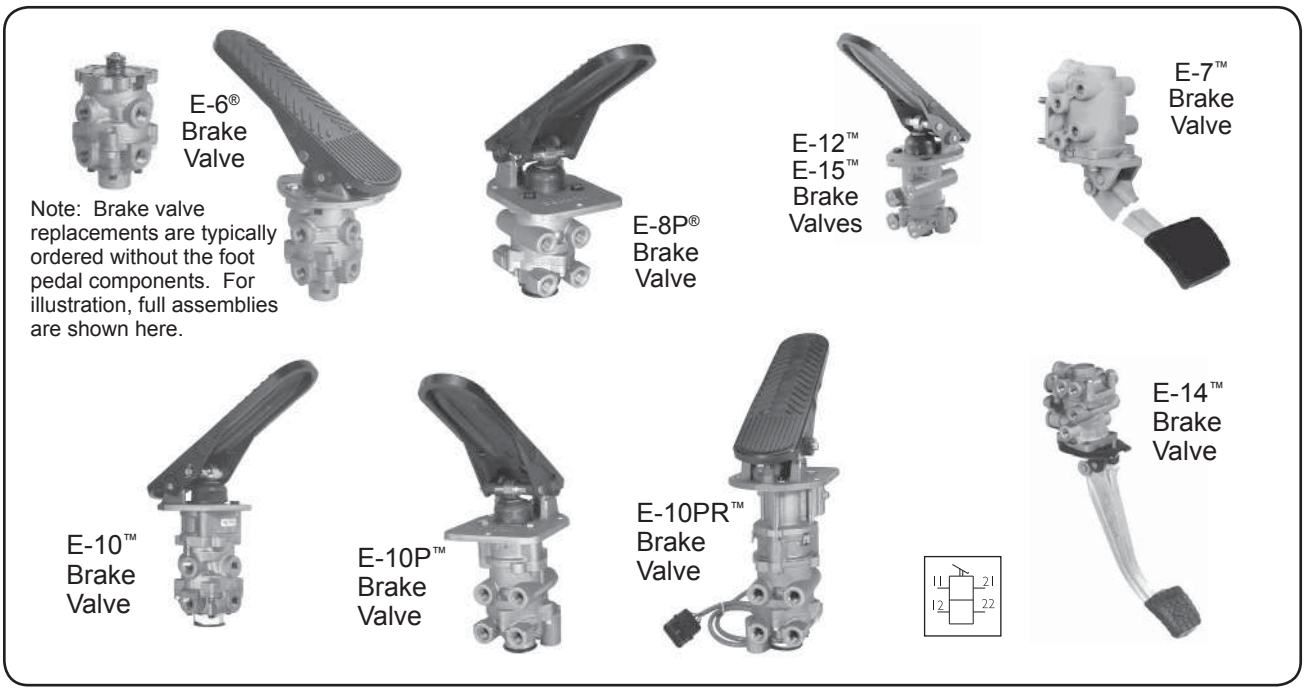

Dual Circuit Brake Valves

When the driver applies the service brakes using the brake pedal/treadle, a two-part plunger within the brake valve moves, closing the valve's exhaust and opening passages within the valve that allow the air pressure waiting there to pass through and be delivered to the rear and front brake systems. The pressure quickly increases in the brake chambers and applies force to the push rod, transferring the force to the S-cam or air disc brake. Frictional forces slow the wheels and the vehicle comes to a stop. When the driver removes all force from the brake valve the internal return springs move back to their original position and allow air in the valve and delivery lines to vent to atmosphere through the exhaust port.

The Bendix® E-6®, E-8P®, E-10™, E-10P™, E-12™ and E-15™ dual brake valves are typically **floor mounted** and treadle operated, while the Bendix® E-7™ and E-14™ dual brake valves are **bulkhead mounted**, suspended pedal valves.

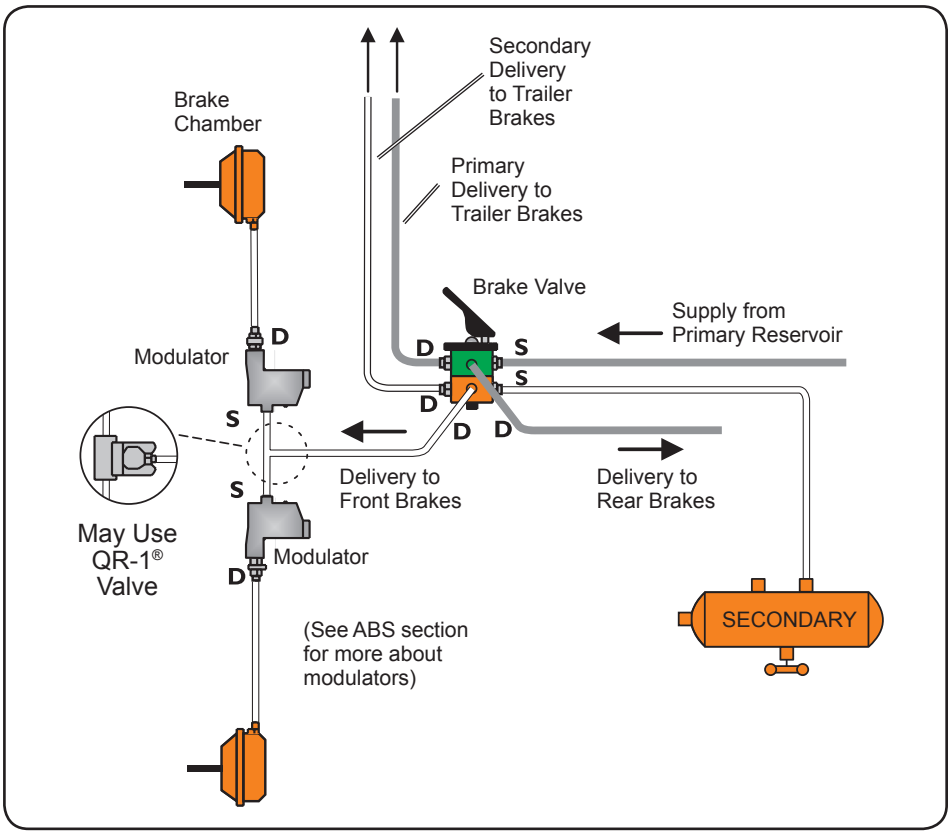

Mostly used in the transit (buses/coaches) industry, the **E-10PR**™ retarder control brake valve has circuitry that is used to communicate with retarder systems installed on automatic transmission vehicles - extending the life of brake system components.

Hand-operated Brake Valves

For information on trailer control hand-operated valves, see page 29.

Vehicle Parking

For vehicle parking, rear brake actuators are designed with large internal springs that, when engaged, hold a parked vehicle in position. When the driver prepares to move away and releases the parking brake, the spring force is countered by the introduction of air pressure into a chamber within the spring brake portion of the actuator. A feature called anti-compounding helps prevent the application of both the spring and service brakes together.

Take Air Brake Training with the Experts

Bendix is proud to offer its Air Brake Training School.

The three-day training is tailored to both new and experienced technicians and provides students with valuable technical knowledge. Beginning with the fundamentals of compressed air, classes cover the description, operation and service of major Bendix air brake components of dual air brake systems, as well as antilock braking.

To enroll, visit www.bendix.com and visit our training school pages to see the dates of classes offered in your area. Class size is limited and enrollment is on a first-come, first-serve basis. Registration may be completed online, or by phone (1-800-AIR-BRAKE).

Actuators

Actuators convert the air pressure being applied into a mechanical push-rod force acting on the foundation brakes. Air enters the actuator and pressurizes a chamber containing a rubber diaphragm. The air pushes against the diaphragm, pushing against the return spring and moving the push-plate (and push-rod) forward. Some different types of actuators used in air brake systems are: brake chambers, rotochambers (with longer push-rod stroke travel), spring brake actuators (for rear brake axles) and safety actuators (with internal locking mechanisms).

Brake chambers are available in many sizes, providing a wide range of output forces and strokes. Different size brake chambers are identified by numbers which specify the effective area of the diaphragm: a “type 30” brake chamber has 30 square inches of effective area. Some brake chambers with extended push-rod stroke travel are available.

Rotochambers are also available in several sizes, providing a wide range of output forces. The rolling type diaphragm used in rotochambers provides long life and gives a constant output force throughout the entire stroke. Rotochambers are frequently used in industrial applications.

Spring brake actuators are composed of separate air and mechanical actuators in a single housing. Mounted at the wheel of the axle it serves, it functions as a service, parking and emergency brake. Connected to the service brake valve, the air applied portion of the actuator functions as the service brake. The mechanical portion of the actuator contains a powerful spring which is compressed by adding air pressure or released by removing air pressure. The spring brake therefore contains two actuators which use air pressure in opposite ways. The service actuator requires air pressure to apply the brakes, while the park or emergency actuator uses air pressure to release the brakes.

See the section starting on page 53 for information about the physics behind how actuators work.

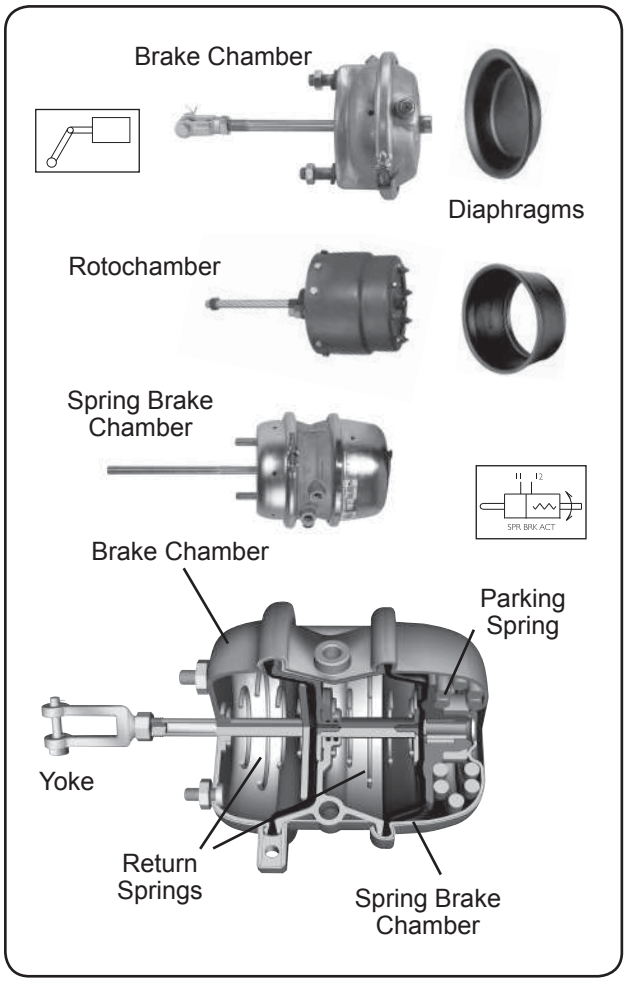

Slack Adjusters

The slack adjuster is the link between a brake chamber or actuator and the S-Cam brake camshaft. Its arm is fastened to the push rod with a yoke and its spline is installed on the foundation brake cam shaft. It transforms and multiplies the force developed by the chamber into a torque which applies the brakes via the brake camshaft.

Manual Slack Adjusters

To compensate for the gradual wear on the brake block lining, slack adjusters are equipped with an adjusting mechanism, which provides a means of adjusting for brake lining wear. Slack adjuster models are designated by a number which represents its maximum torque rating (e.g. a type 20 unit is rated for a maximum of 20,000 inch-pounds of torque). Slack adjusters are available in various arm configurations, lengths and spline types.

The entire slack adjuster operates as a unit, rotating as a lever with the brake cam shaft as the brakes are applied or released. The most efficient braking action is obtained when the slack adjuster arm travel is approximately 90 degrees and in the recommended range of the chamber. Therefore, it is important that brake adjustments are made as often as necessary.

Automatic Slack Adjusters

Automatic slack adjusters perform the same function as the standard unit, except that it automatically adjusts for lining wear. The Bendix design monitors brake lining to brake drum clearance, thus eliminating the possibility of over adjustment.

The automatic slack adjuster does **not** require periodic manual adjustment, however, the unit does provide for manual adjustment. All Bendix slack adjusters incorporate a grease fitting and/or a tapped hole for a lube fitting.

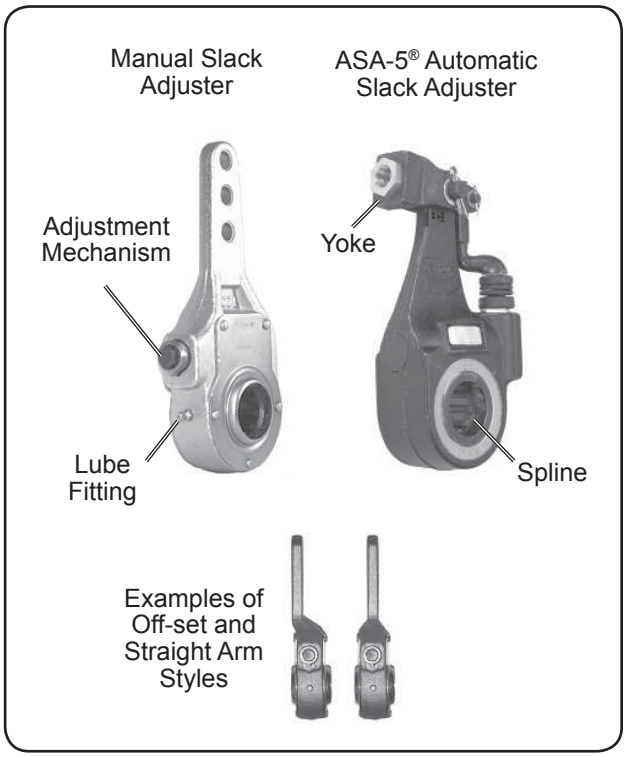

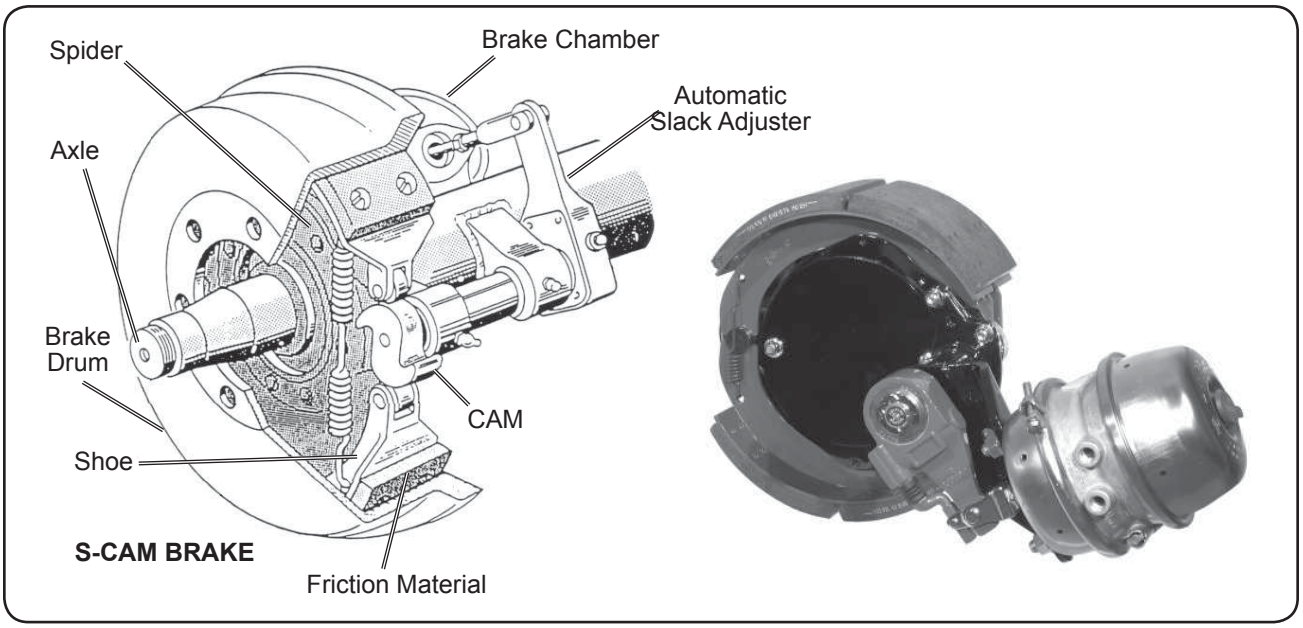

Foundation Brakes: S-Cam and Air Disc

The foundation brake is the actual braking mechanism located at each end of the axle that provides the primary retardation for controlling vehicle speeds. It generally consists of an air service and/or spring brake chamber, a mechanical brake mechanism and friction material.

Cam Actuated Drum Brakes

In a cam type foundation drum brake, the pneumatic system is linked by an air line to the air service and/or spring brake chamber, which is then connected to the arm of a slack adjuster by a push rod and clevis. The slack adjuster is installed on the spline of the forged brake cam shaft. The slack adjuster acts as a lever, converting linear force of the chamber push rod into a torsional force needed to apply the brakes.

When torque is applied to the cam shaft, the “S” shape on one end of the cam spreads the brake shoes, forcing the brake lining into contact with the brake drum, therefore retarding and/or stopping the vehicle.

Cam brakes are offered in various drum diameters to meet vehicle braking requirements, with the most commonly encountered being the 16½ inch version. The cam brake has a “leading-trailing” shoe design with one or more fixed anchor points for the shoes, opposite the cam end of the shoe.

The structure of cam actuated brakes generally consists of stamped steel brake shoes and spiders (torque plates) for standard duty applications, and cast shoes and spiders for heavy duty applications.

S-Cam Brake Linings

When cam actuated drum brakes are applied, the friction material contacts the brake drum. The friction between the lining and drum effectively converts the kinetic energy of the vehicle into thermal energy, heating up the brake drum and lining. The friction material used in the brake must have the capability of withstanding the heat until dissipated. It takes the right combination of ingredients to provide all the desirable characteristics: including having a torque output sufficient to stop the vehicle, long lining life, long drum life, and noise reduction.

All friction material is identified by stenciled codes on its edge. These codes consist of the name or brand of the manufacturer, the formula identification, the specific part number, and usually two letters designating the lining’s general friction level (examples: EF, FG). It should be noted that these stenciled letters are not considered to be accurate enough for choosing replacement linings. Either genuine original equipment linings should be used or an approved material with direct performance comparison.

Selecting the ideal friction material also is dependent upon how the driver uses the brakes, the terrain, vehicle load, etc. The various formulations of material are designed to meet the different needs of these conditions. For example, a vehicle performing heavy duty operations on rugged terrain may benefit by using

a “premium” material designed for high heat situations instead of a “standard” material designed for lighter duty operations.

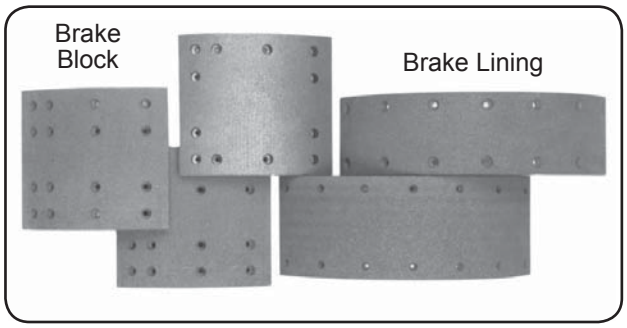

Air Disc Brakes

Bendix air disc brakes are a “floating caliper” design for use as a foundation brake on all axles of heavy commercial vehicles and trailers. In terms of performance and ease of service, Bendix air disc brakes compared favorably to traditional S-Cam brakes. They are available in models with or without a combination spring brake chamber.

Bendix air disc brakes convert air pressure into braking force. When the foot brake is applied, air from the vehicle brake system enters the service brake chamber through the supply port, applying pressure to the diaphragm. The pressure pushes the diaphragm, moving the pressure plate and pushrod against a cup in the lever. The lever pivots on an eccentric bearing and transfers motion to the actuating beam. Moving against return spring force, the actuating beam moves two threaded tubes and tappets, which force the inner brake pad into contact with the brake rotor. Further movement of the actuating beam forces the caliper, sliding on two stationary guide pins, away from the rotor, which pulls the outer brake pad into the rotor. The clamping action of the brake pads on the rotor applies braking force to the wheel.

Releasing the foot brake releases pressure in the service brake chamber. With no pressure in the service brake chamber, return springs force the air disc brakes into a neutral, non-braked position. The non-braked position is mechanically controlled by a brake adjuster mechanism in the caliper. The caliper contains a brake adjuster mechanism that turns threaded tubes to set a gap (running clearance) between the rotor and the brake pads. When operated manually with the adjuster

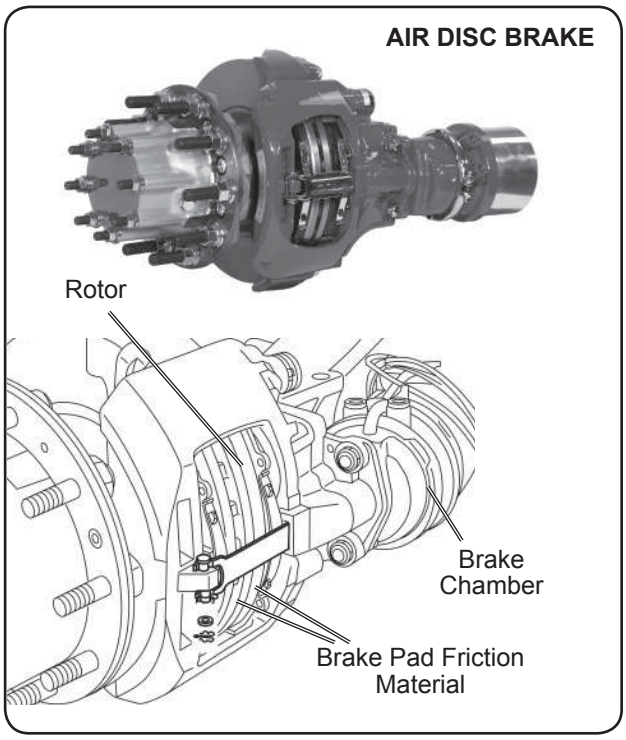

shaft, the adjuster mechanism sets the system’s non-braked position. The adjuster mechanism also operates automatically, whenever the brakes are activated, to compensate for rotor and brake pad wear and keep the running clearance constant.

The rotor-friction couple is carefully designed for optimal performance and durability. It is recommended that only approved replacement disc pads or rotors be used to prevent damage to disc brake components (e.g. cracked rotors) or premature or uneven pad wear, which can adversely affect braking performance.

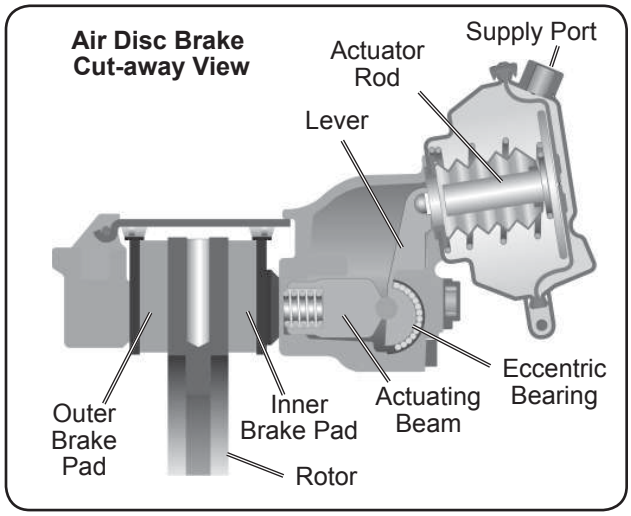

Quick Release Valves

The function of the **quick release valve** is to speed up the exhaust of air from the air chambers. It is mounted close to the chambers it serves. In its standard configuration, the valve is designed to deliver within one psi of control pressure to the controlled device; however, for special applications the valve is available with greater differential pressure designed into the valve.

Several styles of quick release valves are available and are functionally the same. The **QRV™ quick release valve** is the oldest design and utilizes a die cast metal body with an internal diaphragm, spring and spring seat. The **QR-1® quick release valve** also has a die cast body and diaphragm, but does not employ a spring or spring seat. The (non-serviceable) **QRN-2™ quick release valve** is a nonmetallic version of the **QR-1® quick release valve**. The **QR-L™ quick release valve** is an inline device.

Ratio Valves

Historically, valves such as the **LQ-2™, LQ-4™** and **LQ-5™ ratio valves** (not shown) were used in the front axle delivery line of vehicles. During normal service brake applications, these valves were used to automatically reduce application pressure to the front axle brakes, however, as brake application pressure was increased the percentage of reduction was decreased until at approximately 60 psi (depending upon valve design) full pressure was delivered.

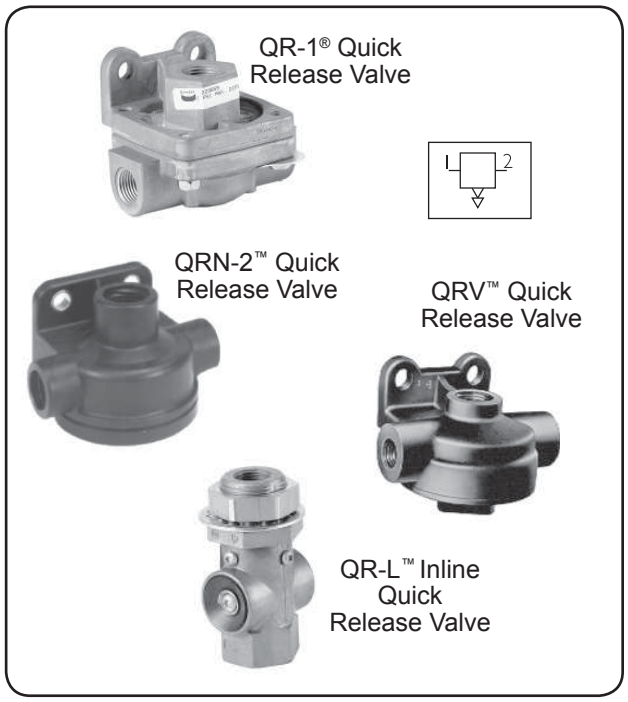

Bobtail Ratio Valves

The **LQ-5™ bobtail ratio valve** is used on the front (steering) axle of tractor air brake systems to reduce brake application pressure during normal tractor-trailer operation. During bobtail mode (when the tractor is not pulling a trailer), tractor braking performance is improved because the LQ-5™ bobtail ratio valve delivers full brake pressure to the steering axle.

The LQ-5™ bobtail ratio valve is designed for tractor systems only, and it replaces the existing front axle limiting valve.

Brake Proportioning Relay Valves

The **BP-R1® bobtail proportioning relay valve** is a combination of two valves in a single housing. The lower portion contains a "standard" service brake relay valve, which functions as a relay station to speed up brake application and release. The upper portion houses a brake proportioning valve which reduces normal service brake application pressure when the tractor is not towing a trailer (bobtail operation). The control port on the BP-R1® valve is connected to the trailer supply valve delivery and signals bobtail operation.

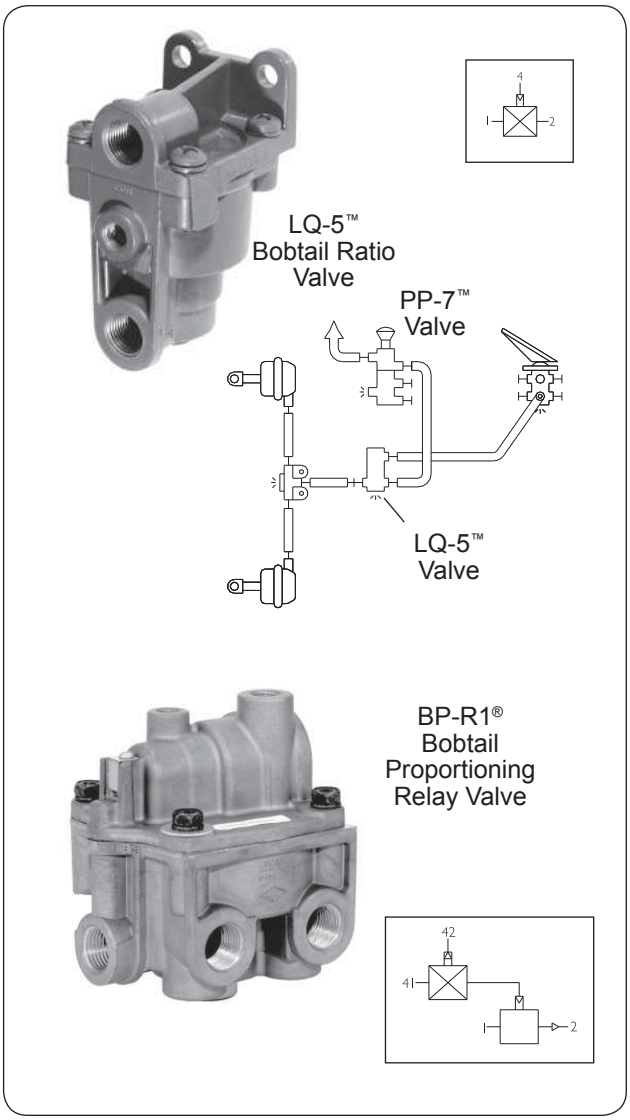

Relay Valves

Relay valves are primarily used on vehicles to apply and release rear axle(s) service or parking brakes. When the driver applies the brakes, air travels through the delivery (in this case signal) line to the relay valve and moves an internal piston down. This closes the exhaust and opens the delivery of air to the brakes. The primary benefits of using a relay valve is that the high capacity of air needed for braking is delivered directly and does not have to travel up to the brake valve and then all the way to the brakes. The brake force is adjustable and when released the relay valve exhausts to atmosphere. Relay valves are generally mounted close to the chambers they serve and are available in both remote and reservoir mount designs. The inlet/exhaust valve cartridge can be replaced without line removal.

In order to design braking systems with good brake timing, that is, where brake application occurs in the correct sequence, some models of relay valves are available in multiple "crack pressures". The crack pressure value for a particular valve is varied by the use of different strength return springs within the valve which the air pressure signal must overcome before air begins to be delivered to the brake chambers.

The **R-8™ and R-14® relay valves** both incorporate an integral double check valve with a balance port connection which provides both an anti-compounding or quick exhaust feature depending upon vehicle application. The anti-compound feature is used when these valves are used to control spring actuated parking features.

R-12® Relay Valve

R-12P™ Relay Valve (0 crack pressure for long wheelbase trailers and dollies)

R-12DC® Relay Valve (Straight trucks)

R-8™ Relay Valve (Anti-compounding, frame or reservoir mounted)

R-8P™ Relay Valve (0 crack pressure for long wheelbase trailers and dollies)

R-6™ Relay Valve

R-14® Relay Valve (Anti-compounding)

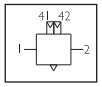

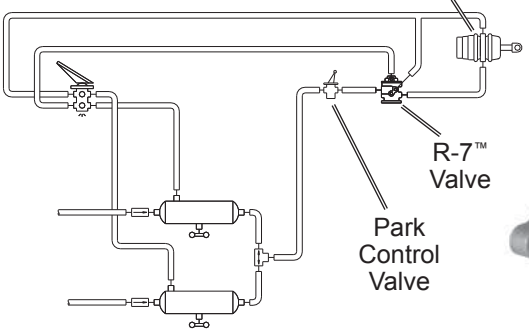

R-7™ Modulating Valve

The **R-7™ Modulating Valve** is used in dual circuit brake systems and performs four functions; during normal operation, it limits hold-off pressure to the spring brakes, provides quick release of air pressure from the spring cavity of the spring brake actuator allowing a fast application of the spring brake actuators, modulates spring brake actuator application should a failure occur in the service brake system and prevents compounding of service and spring forces.

R-7™ Valve

Push-Pull Control Valves

Push-pull control valves are most often mounted on the vehicle dash board and are used for a variety of control applications. The PP-1® and PP-2™ valves are pressure sensitive, normally closed, on/off control valves which automatically return to the exhaust (button out) position when supply pressure is below the required minimum. They may be manually operated to either position when pressure is above the required minimum. Pressure settings and button configuration and wording may vary, depending on application.

The **PP-1® control valve** is commonly used to control parking and emergency brakes. This valve was also used in conjunction with the TP-2™ tractor protection valve in pre-FMVSS 121 single circuit tractor air systems.

Unlike most other push-pull control valves, the **PP-8™** is nonautomatic, and will remain in the applied (button in) position regardless of delivery or supply pressure. The PP-8™ control valve is commonly used to control the tractor brakes only in the (FMVSS 121-compliant) dual system.

The **PP-3™ control valve** is primarily used to control the TP-3® tractor protection valve in pre-FMVSS 121 tractor systems. It features a tripper piston which prevents manual override of the emergency application of trailer brakes.

Trailer Supply Valve (Tractor Protection Control)

The **PP-7™ push-pull control valve** is a pressure sensitive, on/off control valve which will automatically return to the exhaust (button out) position when supply pressure is below the required minimum. It may be manually operated to either position when pressure is above the required minimum. Button configuration and wording may vary depending on application. The automatic exhaust pressure is 40 psi.

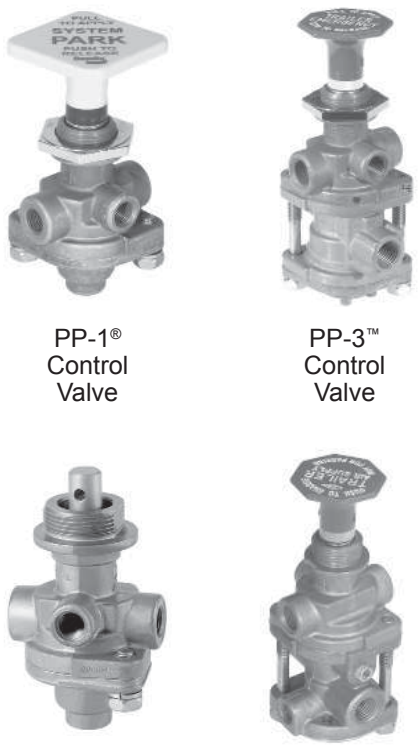

PP-1® Control Valve

PP-3™ Control Valve

PP-8™ Control Valve

PP-7™ Control Valve

The PP-7™ valve is used to control the tractor protection system and is generally identified as the trailer air supply valve. The valve employs an air operated interlock in the lower body which will apply the trailer brakes when the tractor spring applied parking brakes are applied. The interlock ensures that the tractor parking brake can not be applied without the trailer parking brakes also being applied. Normally this action will not affect the position of the PP-7™ valve button. The interlock of tractor and trailer parking is a requirement of government regulations (e.g. FMVSS 121).

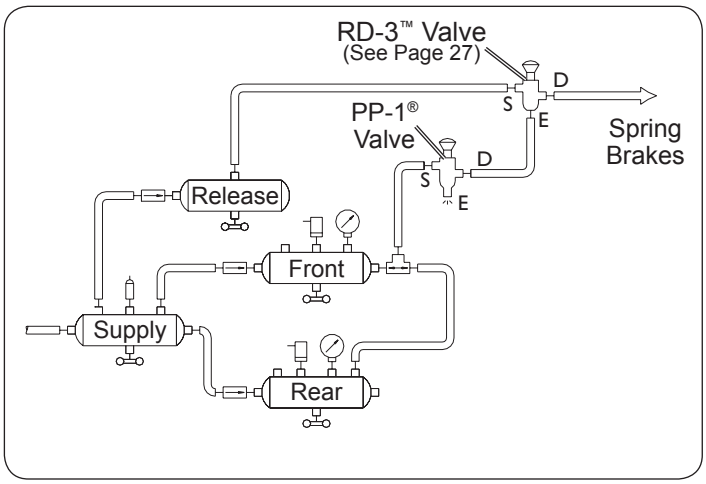

Spring Brake Valves

The **SR-1™ spring brake valve** is used in dual circuit brake systems and serves two functions; during normal operation, it limits hold-off pressure to the spring brakes to 90 or 95 psi. If a loss of pressure occurs in the rear brake service supply, the valve will provide a modulated spring brake application, proportional to the driver's service braking pressure delivered to the front axle.

The Bendix® **SR-7® spring brake modulating valve** is used in dual air brake systems with spring brake actuators. It provides a rapid application of the spring brake actuator when parking, modulates the spring brake actuator application (using the dual brake valve should a primary failure occur in the service brake system) and prevents compounding of service and spring forces.

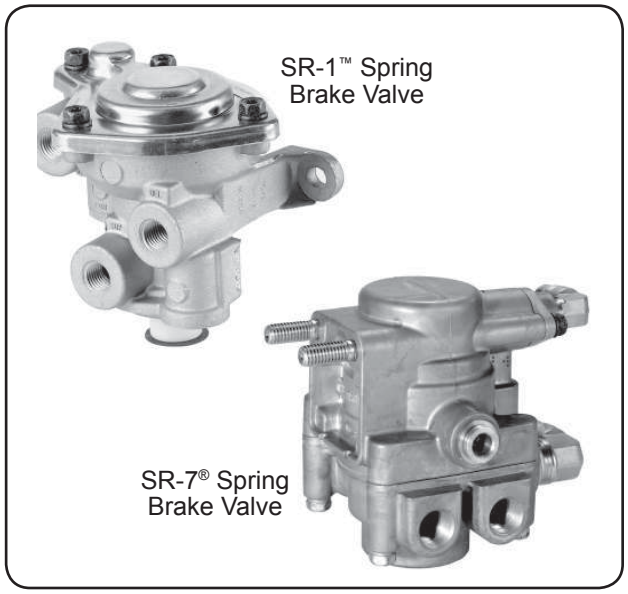

Simple Spring Brake Anti-compound System

General Operation

Brake compounding can occur in a spring brake parking system due to the direct in-line arrangement of both the spring chamber and brake chamber. It occurs in unprotected systems when parking AND service brake applications are made at the same time. An example of this situation occurs when a vehicle is parked on a steep incline; the driver holds the service brakes applied (preventing the vehicle from rolling backward), then actuates the park control which "sets" or applies the spring brakes. For a brief time, the air applied service brakes and the mechanical spring brakes both exert a braking force on the slack adjusters and foundation brakes. The forces of the spring and air applications are additive and can cause damage to the foundation brake components (cam shaft splines, shoes, drum, etc.) and/or slack adjuster. An anti-compounding system is especially important in protecting the adjusting mechanism of automatic slack adjusters from damage caused by over-torque that occurs during a compounded application of the brakes.

Anti-compounding prevents the simultaneous application of both the air and spring brakes by directing application air to the spring brakes when both are applied at once. In the simple anti-compounding schematic shown here, the double check valve allows service application air to apply the service brakes AND move into the spring cavity if they are also applied (no air pressure and springs are also applying brakes).

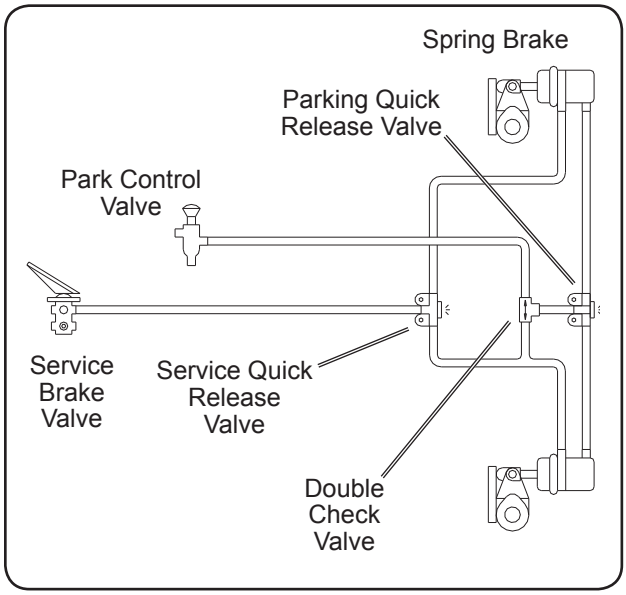

The anti-compounding function of the double check valve is built into several air brake devices such as the SR-7®, R-7™, R-8™, R-14® and QR-1C® valves. When these devices are used in the system, a separate double check valve for anti-compounding is not needed.

It is recommended that the service connection to the anti-compounding device (double check valve) come from a point between the service brake chamber and the first "upstream" service device (in this case a quick release valve).

Lever Operated Control Valves

The TW-2™ and TH-3™ valves are identical in appearance (and similar to the TW-1™, TW-3™ and TW-4™) except they have two control valves housed in a single body. These two valves differ by the internal cammed control lever, which for the TW-2™ control valve has two lever positions, while the TH-3™ valve has three.

The TW-1™, TW-3™ and TW-6™ series control valves are manually operated, non-modulating (on - off) control valves used in a wide variety of control functions. The TW-1™ and TW-3™ are dash-mounted, lever-controlled valves.

The TW-4™ is a manually operated momentary non-modulating control valve commonly used in conjunction with air starter systems.

A momentary push-type control valve, the TW-5™ will deliver air pressure when the plunger is pushed in and exhaust delivered air when the plunger load is released. A typical application is for control of a differential lock-out.

The TW-12™ control valve is a manually operated, non-graduating, on-off valve. It is extensively used in hydraulic braking systems to control devices that are responsible for the application and release of the parking brakes, but is also used in air brake system applications.

Stop Lamp Switches

The SL-4™ and SL-5™ stop lamp switches are pressure-sensitive electro-pneumatic switches installed in the service application system. They operate the vehicle stop lamps by completing an electrical circuit and lighting the stop lamps each time a brake application is made.

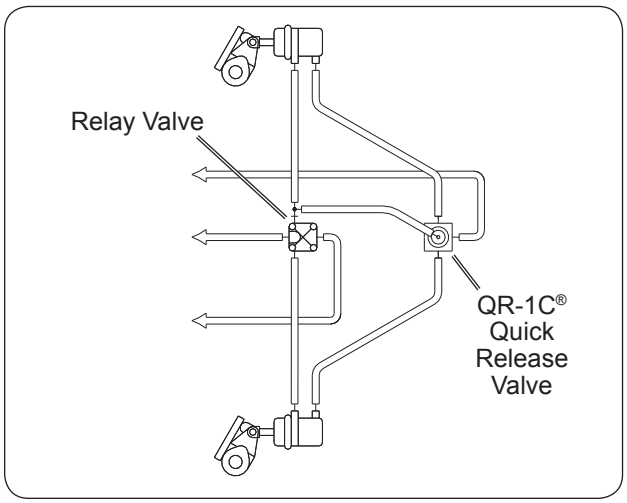

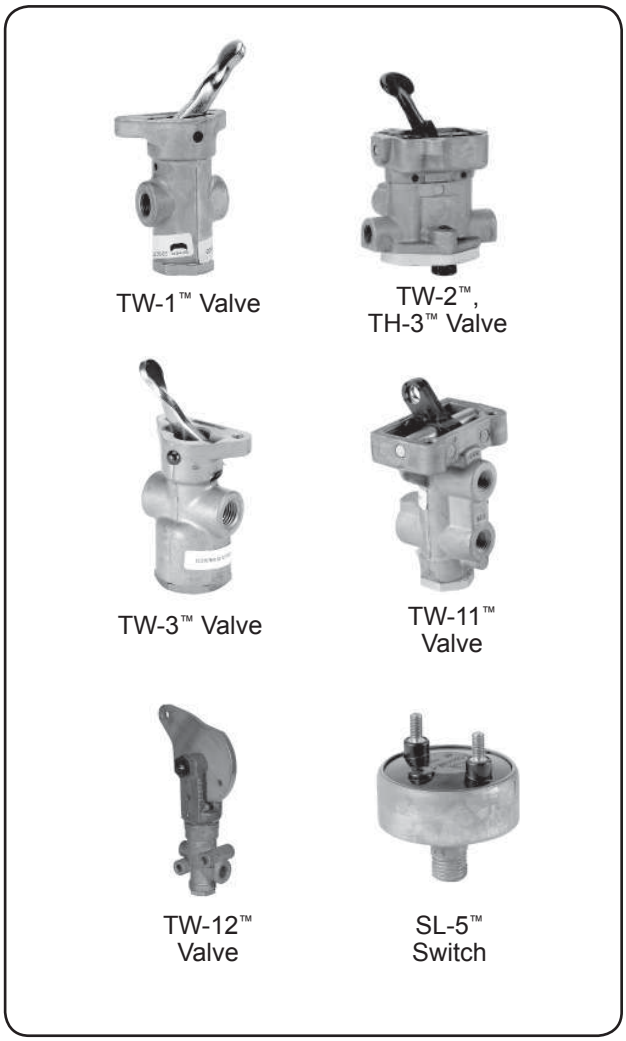

See page 14 for the DS-2™ double check valve and stop light switch.

Dual Function Quick Release Valve

The QR-1C® valve has a dual function. It works as a quick release valve for rapid park brake actuation and also provides anti-compounding, since its double check valve prevents simultaneous service and emergency spring brake applications.

QR-1C® Quick
Release Valve

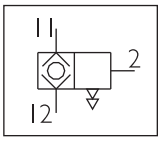

Additional Control Valves

Inversion valves are air operated control valves, and unlike most control valves are normally open, i.e. without control pressure the supply is common to the delivery. The inversion valve is closed by using air pressure from another source and is primarily used in emergency or parking brake systems which operate with air from an isolated reservoir. The valve is also used in interlocking and sequencing applications, where the operation of components must take place in specific sequence.

The **TR-3™ valve** is used extensively in DD3™ actuator systems, it is also used in interlocking applications. A specialized version of the TR-3™ valve is available with an internal channel connecting supply pressure to control, typically with the external control port plugged.

The **SV-1™ synchro valve** is an air signal-operated, non-graduating (on-off) control valve offered in a variety of pressure settings and is used to delay or sequence the action of other pneumatic devices.

When used in non-automatic applications it controls a separate air system circuit.

The SV-1™ valve can also be used as an automatic controller (when its supply and control are connected). The valve will open, close and exhaust automatically as the control and supply pressures rise or fall.

The **PP-5™ push pull control valve** is a pressure sensitive, on - off control valve. It is used in conjunction with vehicle torque converter systems, engine speed control systems and some parking brake systems. In addition to automatic exhaust and manual control, the PP-5™ valve employs a pilot air release feature (interlock) which will allow the valve to be exhausted by applying a low pressure signal from another control valve to the PP-5™ control port.

The **RD-3™** is a manually operated on-off control valve. The valve is spring loaded and will remain in the exhaust (button out) position. Constant manual force is required to cause the valve to deliver air. The RD-3™ control valve is primarily used as an emergency brake release control valve.

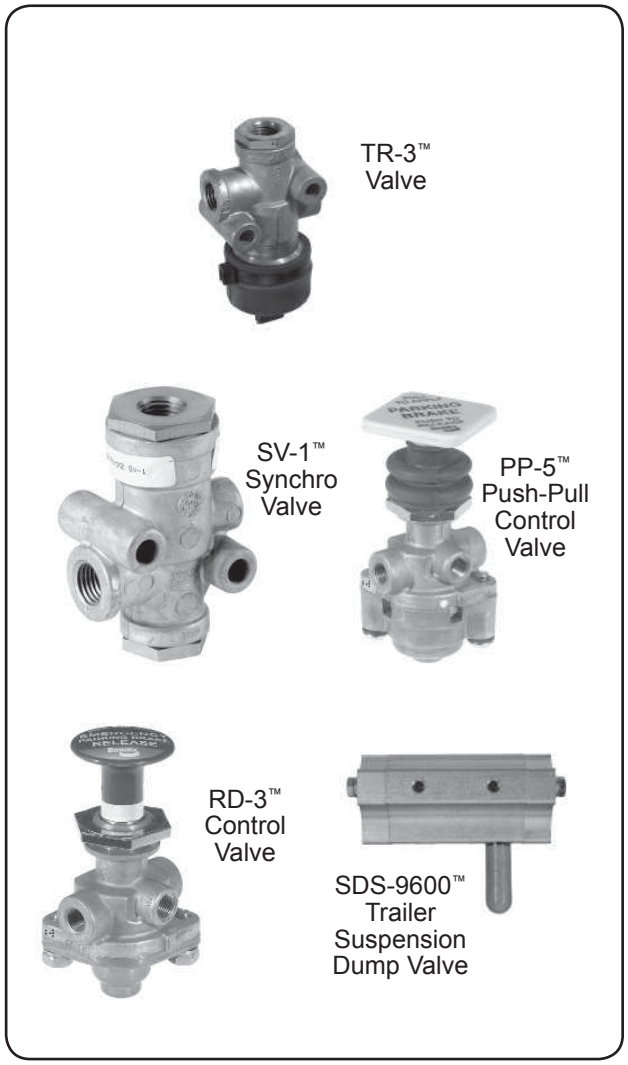

The **SDS-9600™ trailer suspension dump valve** is used on spread axle trailers to help negotiate tight turns at low speeds. When activated, this valve exhausts a portion of the air out of the rear trailer axle suspension, transferring weight to the forward trailer axle. The trailer can then pivot on the forward trailer axle in a turn.

Section 4: Tractor Parking, Trailer Charging/Parking and Emergency Systems

The tractor/trailer parking and emergency system typically consists of:

- **The tractor parking control system**
- **The trailer parking and emergency system**, and
- **The tractor protection system**

See the front covers of this handbook for system schematics.

Park Co ntrol Valves

The **PP-DC® park control double check valve** is a push-pull, manually operable on/off valve with an integral double check. It is dashboard mounted and provides in-cab control of truck or bus parking brakes. Manually pushing or pulling the button will release or apply the parking brakes. The integral double check valve allows the PP-DC® valve to receive supply air pressure from either, or both, the front or rear axle service reservoirs.

The valve is pressure sensitive and automatically moves from the applied (over the road position) to the exhaust position (thus applying the parking brakes) if total system pressure (both front and rear axle reservoirs) drops below 20 to 30 psi.

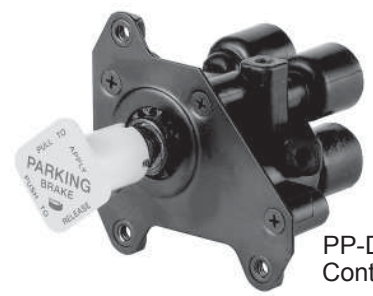

PP-DC® Park Control Valve

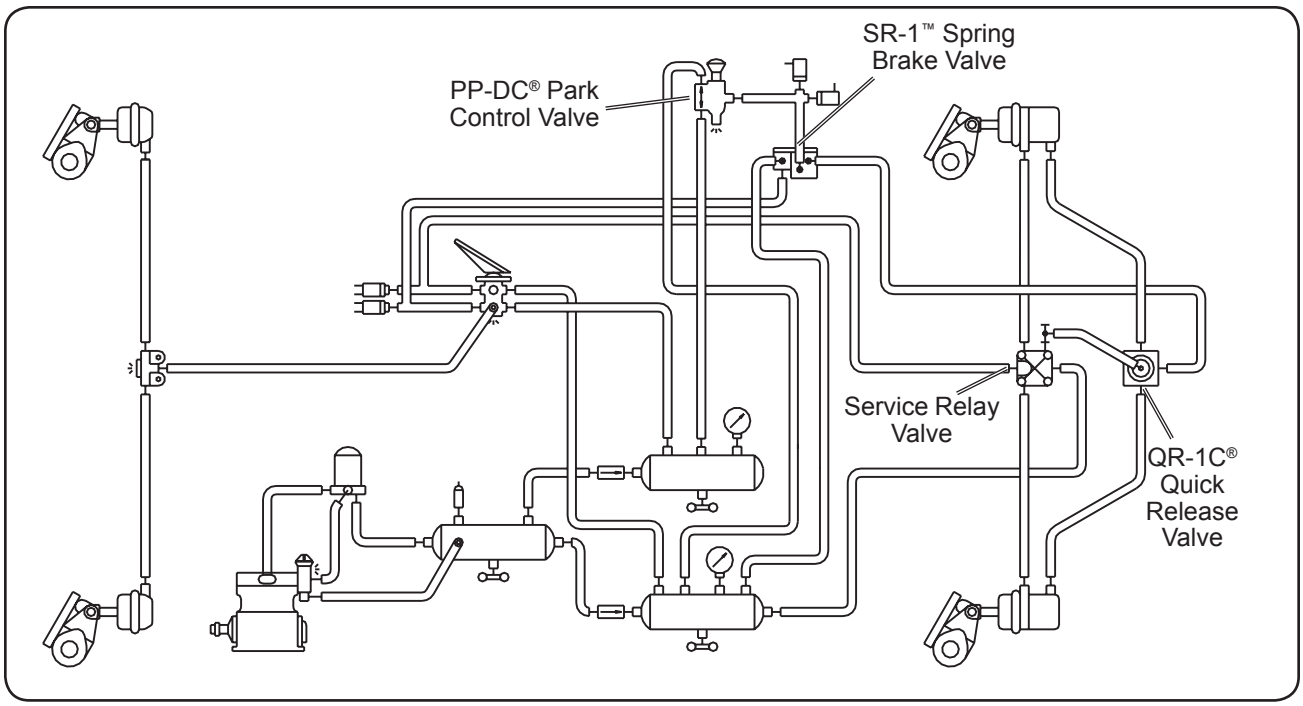

The **MV-3® dash control module** combines the functions of a PP-1® control valve and a PP-7™ trailer supply valve together into a unified device.

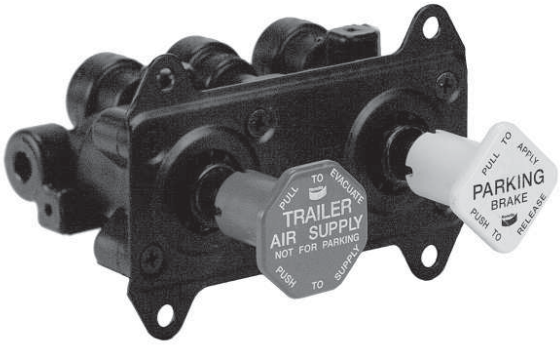

The Bendix® MV-3® dash control module is a two-button, push-pull control valve housed in a single body which includes a dual circuit supply valve and a check valve. The MV-3® valve can duplicate the functions of any existing two or three valve push-pull system and has the advantage of reduced plumbing.

The MV-3® module body, plungers and spools are made out of a non-metallic, non-corrosive material. All air connections are at the back of the module with the exception of the optional auxiliary port.

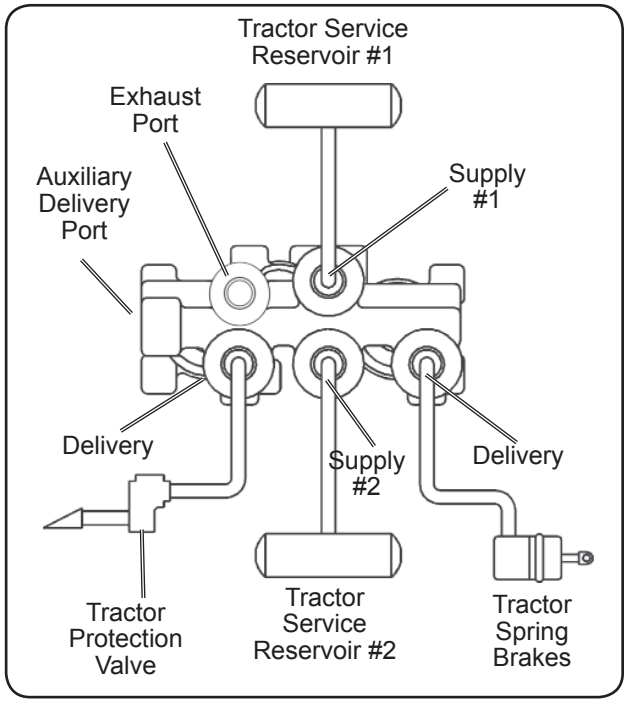

The MV-3® module provides the following functions:

- Tractor Protection Control.
- System Park.
- Trailer Park Only.
- Trailer Charge with Tractor Spring Brakes Applied (Tractor Park Only).
- Supply Reservoir Selection.
- Primary & Secondary Reservoir Connections.

Trailer Control (TC) valves are hand-operated, graduated control valves. The most common use of trailer control valves is for independent control of trailer service brakes, however, the valve can be used for any application where graduated application pressure is required.

These valves use a cam and spring mechanism to control delivery air pressure and are available with several different styles of body, clamp and handles. Some models are available with self-returning handles. Trailer control valves are often used to hold the vehicle while the vehicle's clutch and accelerator are co-ordinated. The trailer control valve should never be used for parking.

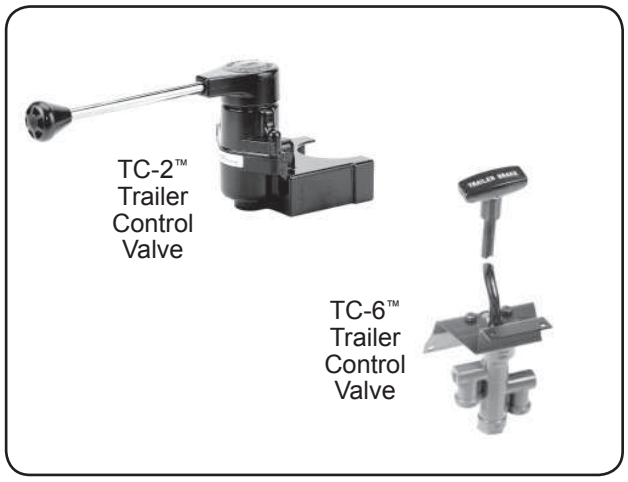

Tractor Protection Valves

The primary function of tractor protection valves (e.g. the **TP-3® tractor protection valve**) is to protect the tractor air brake system under trailer breakaway conditions and/or conditions where severe air leakage develops in the tractor or trailer. In addition, in everyday use, the valve is used to shut off the trailer service and supply lines before disconnecting the tractor from the trailer. The valve is usually mounted at the rear of the tractor cab and a dash mounted control valve.

The **TP-3DC™ tractor protection valve** integrates the functions of the TP-3® valve and one double check valve. A stop light switch port is provided and is connected to the delivery of the internal double check valve. It also has an internal single check valve that prevents air pressure from being trapped in the trailer service line, which prevents brake compounding and minimizes roll away conditions.

The **TP-5™ tractor protection valve** is designed to incorporate several pneumatic control functions within a common housing, thereby eliminating considerable interconnection piping.

It includes a combination of two double check valves and a tractor protection valve. With this valve, either brake circuit on the vehicle can be used to apply the trailer brakes. In addition, when used in conjunction with a control valve, it opens and closes the trailer service and supply lines in the same manner as a tractor protection valve. The valve also incorporates porting for the installation of the service stop lamp switch, and a quick release valve for the trailer service line.

TP-3® Tractor Protection Valve

TP-3DC™ Tractor Protection Valve

TP-5™ Tractor Protection Valve

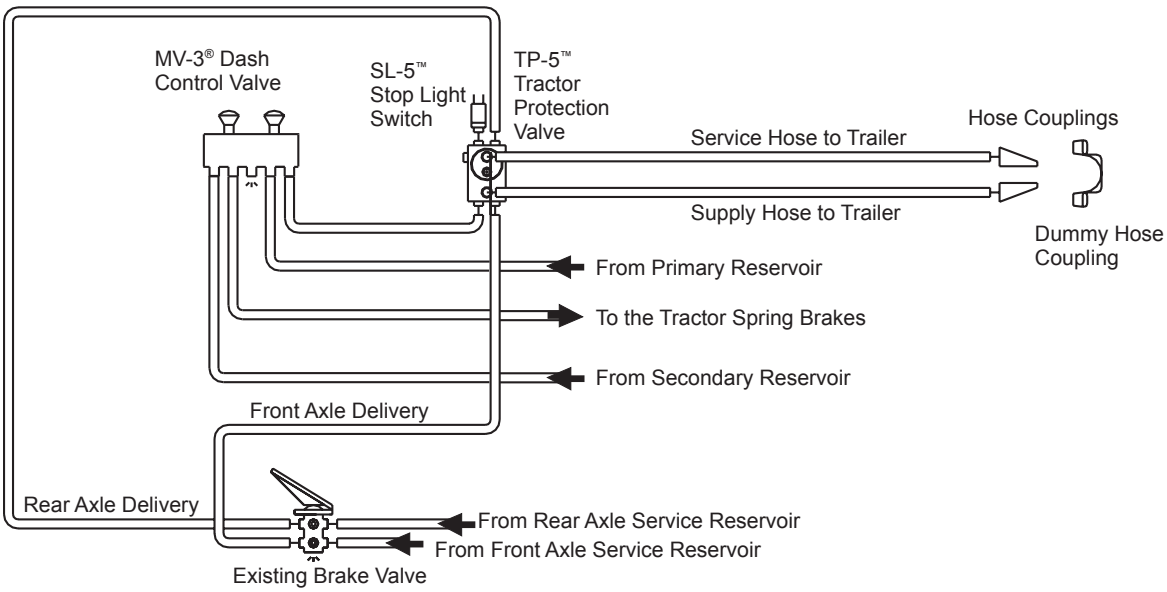

Trailer Spring Brake Valves

Trailer spring brake valves are designed for use in trailer air brake systems.

The SR-4™ trailer spring brake valve was an earlier design that used a dedicated spring brake reservoir for release of the trailer spring brakes. Note: This valve is available for service only, due to changes made in FMVSS 121 (superseded by SR-5™). All other Bendix spring brake valves use service reservoir air for trailer spring brake release.

Mounted on one of the trailer reservoirs, these valves control both the parking and emergency brake functions of the spring brakes and use internal pressure protection and check valves to isolate reservoir failures to prevent automatic application of the trailer spring brakes. An anti-compound feature is part of these valves.

With later government regulations allowing simplified system plumbing, Bendix developed the SR-5™ trailer spring brake valve. It also mounts to a reservoir on the trailer and, like the SR-2™ & SR-4™ trailer spring brake valves, it controls the trailer spring brakes, but unlike these valves, the SR-5™ trailer spring brake valve uses supply line pressure to release the trailer spring brakes. Because dedicated or isolated reservoir pressure is no longer required by law for spring brake release, the SR-5™ trailer spring brake valve system needs only one reservoir for service volume on single axle trailers. Two reservoirs are generally required for service volume requirements on tandem axle trailers.

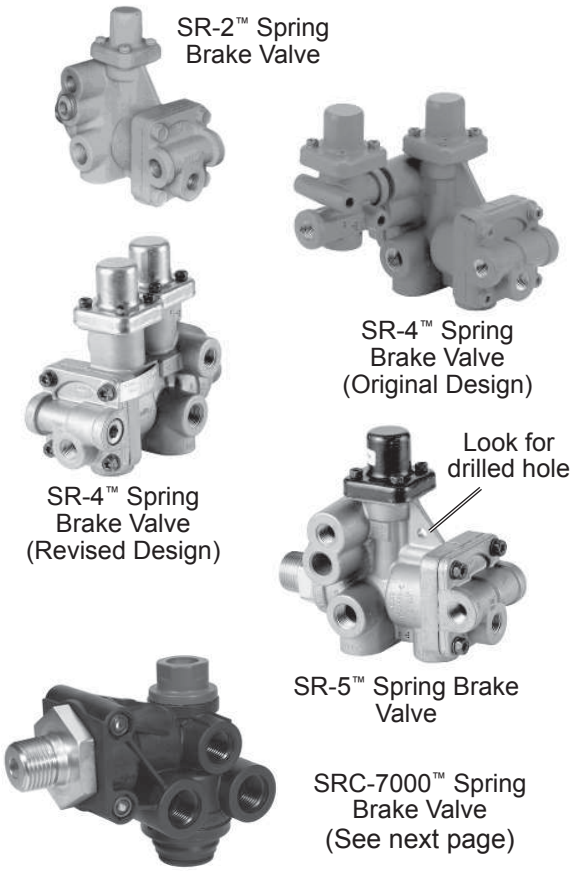

An integral anti-compound feature is part of the SR-5™ trailer spring brake valve. The SR-5™ is a "spring brake priority" trailer valve.

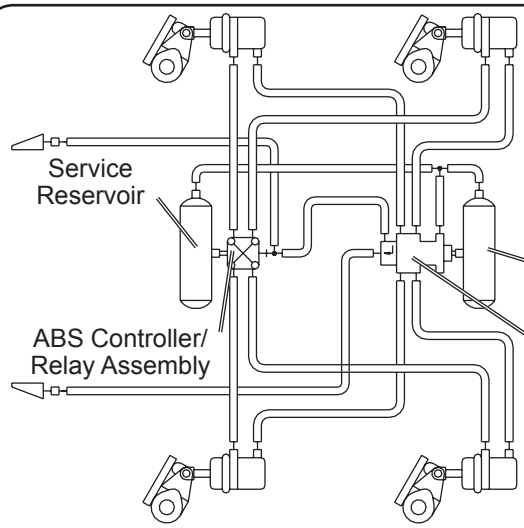

Typical SR-5™ Trailer Spring Brake Valve Tandem Axle Trailer Air System

Some System Designs use a Single Two-Compartment Reservoir

Note: The SR-5™ trailer spring brake valve looks very similar to the original design of the SR-2™ valve. Look for a hole drilled into the flat surface between the pressure protection valve and the body for positive SR-5™ trailer spring brake valve identification.

The Bendix® **SRC-7000™ trailer spring brake valve** is a reservoir-mounted trailer valve that can control up to six spring brake actuators during parking or emergency applications. It has the following capabilities:

- Automatically applies trailer spring brakes in the event of a breakaway or trailer supply line failure.
- Protects trailer reservoir(s) air pressure in the event of a breakaway or trailer supply line failure.
- Allows no automatic trailer spring brake application with air pressure loss in trailer reservoir(s).
- Allows the trailer spring brakes to be applied and released repeatedly with a failed trailer reservoir(s):
- Anti-compounding prevents an overriding service brake signal while the trailer supply line is at atmospheric pressure.
- Does not allow service system charging if a failure occurs in the parking brake circuit.
- Muffler & Snorkel capable.

Trailer System Schematic (Featuring Bendix® SRC-7000™ Spring Brake Valve and TABS-6™ ABS)

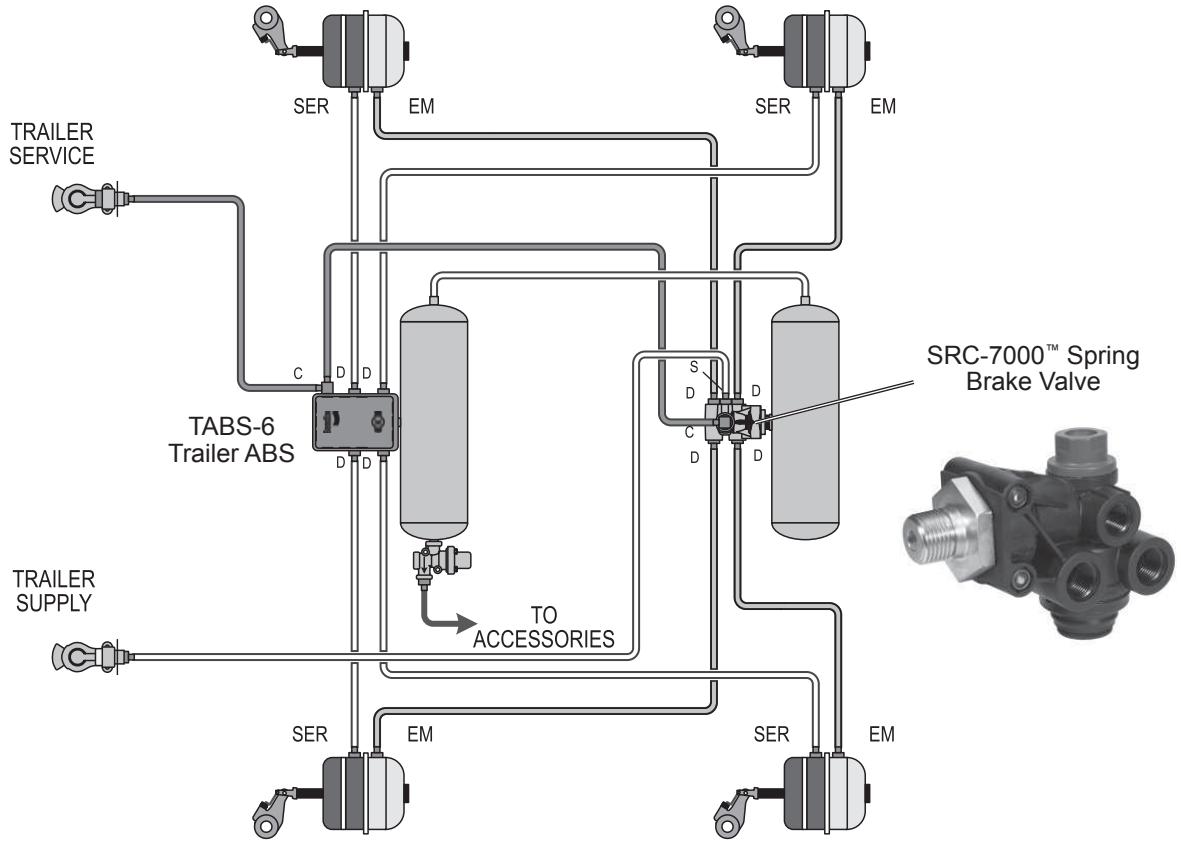

The **TE-1™ trailer emergency stop light switch** is a pressure-sensitive switch to operate the stop lights in the event of emergency trailer brake application.

Section 5: Converter Dolly Brakes

Typical components found in a converter dolly brake system are shown in this section.

See the cover pages for other system schematics.

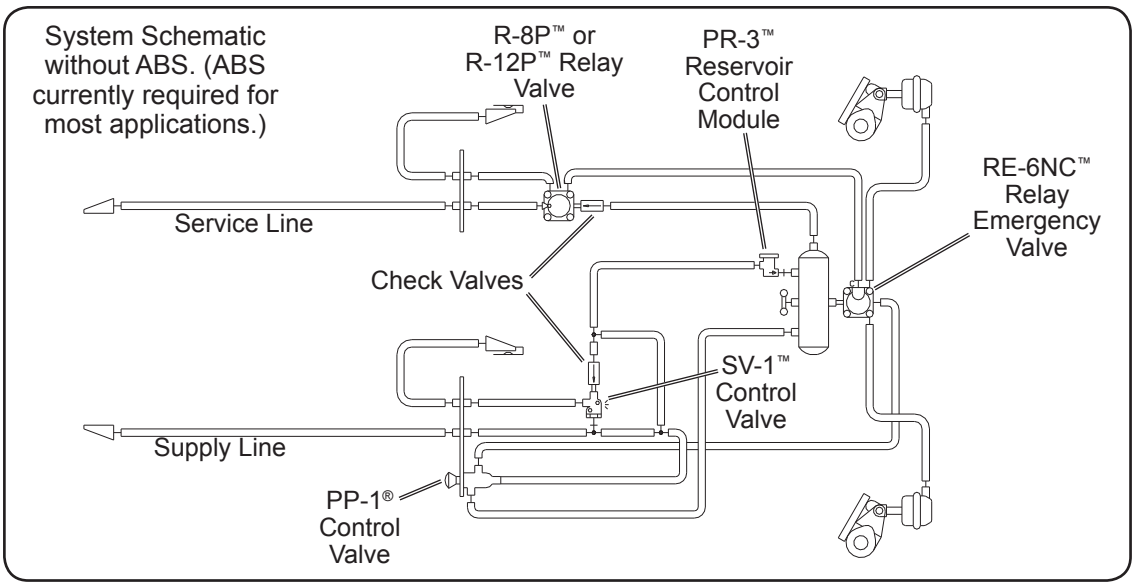

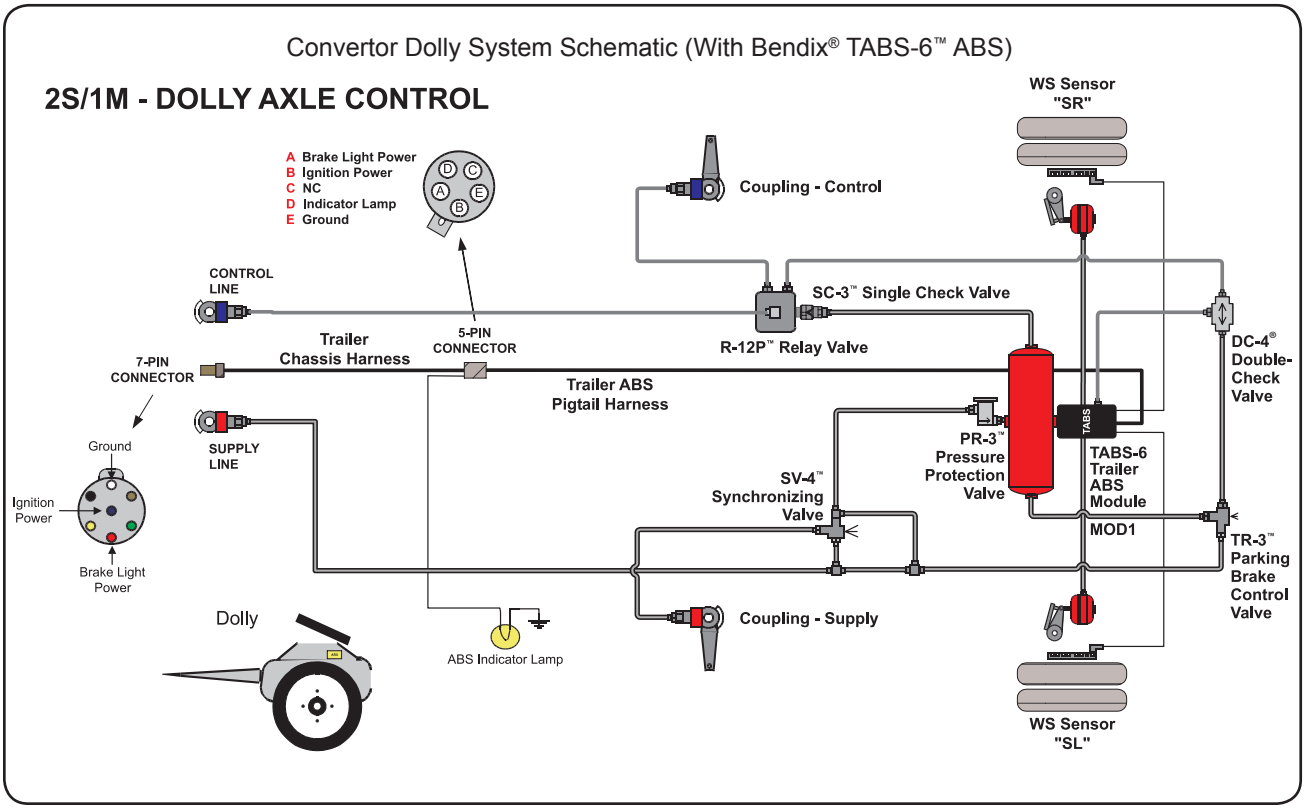

Typical Converter Dolly Components

The **R-8P™ and R-12P™ pilot relay valves** are special purpose relays designed specifically for use on trailers and converter dollies. These 0 p.s.i. crack and differential relays speed up brake application signals to provide an equal or balanced pressure signal to all trailer and dolly brakes on double and triple trailer combinations. By maintaining the same application signal across the entire train of trailers these pilot operated relay valves aid in achieving overall vehicle brake balance and stability.

The **SV-1™ synchronizing ("synchro") valve** is a remote mounted air operated, ON-OFF control valve. It is used to control air from a remote supply, has a set opening and closing pressure and can be used to delay or sequence the action of other pneumatic devices. Use of the SV-1™ synchro valve in dolly or towing trailer system prevents automatic application of the towing (lead) trailer or dolly emergency brakes in the event a breakaway occurs with the towed (rear) trailer. The **SV-4™ synchronizing valve** works similarly to the SV-1™ synchro valve, and is used on trailer converter dollies to minimize the possibility of false charging.

The **RE-6NC™ relay emergency (non-charging) valve** is used in Dolly Systems and replaces the conventional RE-6® valve. The RE-6NC™ valve is similar to the RE-6® valve but is designed to prevent direct filling of the dolly reservoir through the RE-6NC™ valve. It is generally used in conjunction with the PR-3™ pressure protection and single check valve to provide rapid dolly brake release.

The **PR-3™ reservoir control valve** is the combination of a PR-4™ pressure protection valve and a single check valve. This valve may be used in a variety of applications, however the most common is in the converter dolly brake system where it functions to delay filling of the reservoir until pressure in the supply air line exceeds 75 psi and to prevent pressure loss due to a failure in the trailer being towed.

The **PP-1® control valve** is commonly mounted to the frame and used as a brake release valve. Pushing in the PP-1® valve releases the dolly's parking brake and allows it to be moved. Since the dolly uses its own supply air to park, once it's moved, pulling out the PP-1® valve button re-parks the dolly.

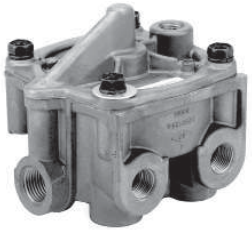

R-12P™
Relay Valve

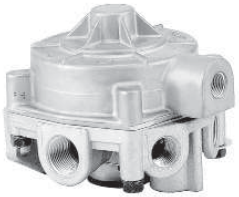

R-8P™
Relay Valve

SV-1™
Synchro Valve

SV-4™
Synchro Valve

RE-6NC™
Relay
Emergency
Valve

PR-3™
Reservoir
Control Valve

PP-1®
Control
Valve

Converter Dolly systems also widely use DC-4® double-check valves (see page 14), and TR-3™ inversion valves (see page 27).

Section 6: Antilock Braking Systems

For color schematics of tractors and trucks see the fold-out covers of this handbook.

Bendix® **Antilock Braking Systems (ABS)** use wheel speed sensors, ABS pressure modulator valves, and an **Electronic Control Unit (ECU)** to control either four or six wheels of a vehicle. Bendix ECUs are able to optimize slip between the tire and the road surface by monitoring individual wheel turning motion during braking, and adjust or pulse the brake pressure at the wheel end. When excessive wheel slip, or wheel lock-up, is detected, the ECU will activate the Pressure Modulator Valves similar to a driver pumping the brakes. The ECU, however, is able to pump the brakes on individual wheels (or pairs of wheels), independently, and with greater speed and accuracy than a driver.

In addition to the ABS function, premium models of the ECUs provide an **Automatic Traction Control (ATC)** feature. Bendix ATC can improve vehicle traction during acceleration, and lateral stability while driving through curves. ATC utilizes **Engine Torque Limiting** where the ECU communicates with the engine's controller and/or **Differential Braking** where individual wheel brake applications are used to improve vehicle traction.

Premium ECUs have a drag torque control feature which reduces driven-axle wheel slip (due to driveline inertia) by communicating with the engine's controller and increasing the engine torque.

ESP® Electronic Stability System

The ESP® functionality of the Bendix Advanced ABS system responds to a wide range of low- to high-friction surface scenarios including rollover, jackknife and loss of control. It is the recommended system for all power vehicles and especially critical for tractors pulling trailers. In the case of vehicle slide (over-steer or under-steer situations), the system will remove the throttle and then brake one or more of the "four corners of vehicle" (in addition to potentially braking the trailer), thus applying a counter-force to better align the vehicle with an appropriate path of travel. For example, in an over-steer situation, the system applies the "outside" front brake; while in an under-steer situation, the "inside" rear brake is applied.

In the case of a potential roll event, the system will remove the throttle and quickly apply the brakes to slow the vehicle combination below the threshold.

Trailer ABS

See the section beginning on page 41 for more information on trailer ABS systems and components.

ABS Components

Typical ABS components (for trucks and tractors) are:

- Wheel speed sensors (such as the Bendix® WS-24™ wheel speed sensors shown on this page). Each sensor is installed with a Bendix Sensor Clamping Sleeve. Vehicles have an exciter ring (or "tone ring") as part of the wheel assembly, and as the wheel turns, the teeth of the exciter ring pass the wheel speed sensor, generating an alternating current (AC) signal, which varies in voltage and frequency as the wheel speed changes. The ECU receives the AC signal and can then monitor how fast the wheel is turning.
- Pressure Modulator Valves (PMV) (such as the Bendix® M-32™ or M-32QR™ pressure modulator valves - shown on this page). PMVs use solenoids with the ability to apply, hold, or release the air pressure being delivered to the brakes to optimize brake performance. Four, five, or six of these valves may be used depending on ECU model and vehicle configuration.

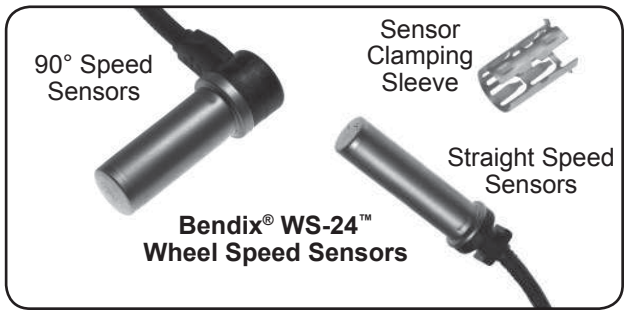

Bendix® WS-24™ Wheel Speed Sensors

Bendix® M-32™ and M-32QR™ Modulators

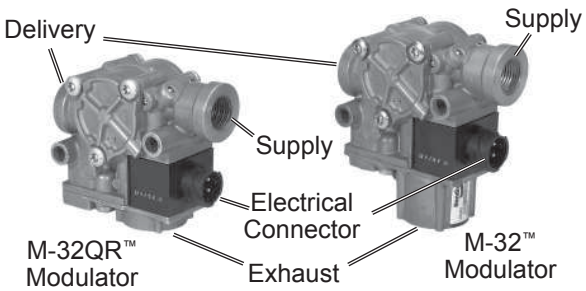

ABS Components continued ...

- Dash-mounted tractor ABS Indicator Lamp
- Service brake relay valve
- Dash-mounted trailer ABS Indicator Lamp (used on all towing vehicles manufactured after March 1, 2001)
- Optional blink code activation switch
- Optional ABS off-road switch. (Off-road feature is not typically available on all models)

Some "Premium" Bendix ABS systems utilize additional components, such as traction control valves, a dash-mounted ATC status/indicator lamp, serial communication to the engine control module, a stop lamp switch input, and optional ATC off-road switch.

With advanced ABS, the roll stability and ESP features require additional components including vehicle sensors to detect vehicle motion (lateral and yaw-rate sensors, and pressure sensors for load estimation) and driver intention (by monitoring the turning of the steering wheel).

All Bendix ECUs feature digital electronics with self test and diagnostic circuitry that continuously monitors operation of the entire antilock system including wiring continuity. A history of all diagnostic trouble codes are stored in the controller's memory and are not cleared by loss of power to the unit.

ECU controllers are typically available in frame-mounted and cab-mounted models.

Bendix Adaptive Cruise & Braking (ACB) also integrates some advanced ABS components to aid in collision avoidance: see page 46 for more information.

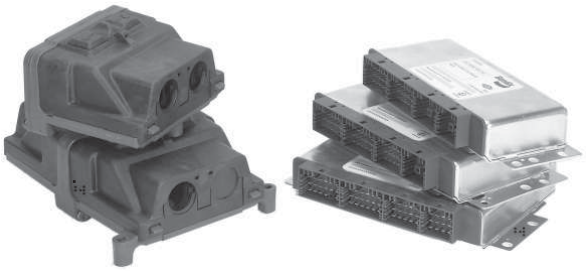

Bendix® EC-60™ ABS/ATC Controllers
(left: Frame mount, and right: Cab Mount.)

Bendix® EC-30™ ABS/ATC Controller

Advanced Bendix® ABS uses yaw and steering wheel sensors to monitor the vehicle motion. See pages 38 and 39.

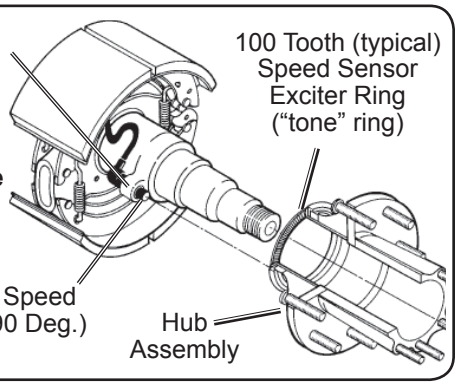

Truck and Tractor ABS Operation

As described in the introduction to this section, Bendix ABS uses wheel speed sensors, modulator valves, and an ECU. By monitoring individual wheel turning motion during braking, the ECU is able to optimize slip between the tire and the road surface by pumping the brakes on individual wheels (or pairs of wheels), independently.

Steer Axle Control

Although both wheels of the steer axle have their own wheel speed sensor and pressure modulator valve, the ECU blends the applied braking force between the two steering axle brakes. A Bendix patented brake application control, called Modified Individual Regulation (MIR), has been designed to help reduce steering wheel pull during an ABS event on road surfaces with poor traction (or areas of poor traction, e.g. asphalt road surfaces with patches of ice).

Vehicle Configurations

Depending on the number of drive axles, various numbers of sensors and modulators may be used for an ABS system. For example, a 4 sensor/4 modulator (4S/4M) system would typically be used for a single drive axle vehicle. System configurations are available for 4S/4M, 6S/6M, and 6S/5M (with the additional axle, a non-driven rear axle, having two sensors, but

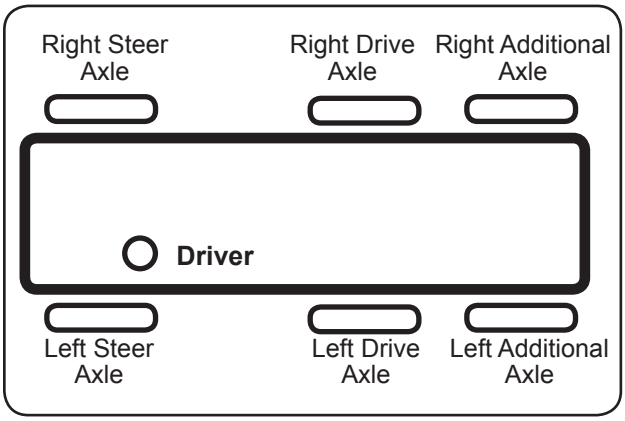

only one pressure modulator valve). In the case of a 6S/5M arrangement, the PMV controls both wheels on the additional axle. The additional axle wheels would receive equal brake pressure, based on the wheel that is currently experiencing the most wheel slip.

Normal Braking

During normal braking, air brake pressure is delivered through the ABS PMV and into the brake chamber. If the ECU does not detect excessive wheel slip, it will not activate ABS control, and the vehicle stops with normal braking.

Retarder Brake System Control

On surfaces with low traction, application of the retarder can lead to high levels of wheel slip at the drive axle wheels, which can adversely affect vehicle stability. To avoid this, some Bendix ECU controllers are designed to switch off the retarder as soon as a lock-up is detected at one (or more) of the drive axle wheels. In these cases, when the ECU is placed in the ABS off-road mode, it will switch off the retarder only when ABS is active on a steer axle wheel and a drive axle wheel.

Optional ABS Off-Road Mode

When used on some off-road surfaces, (for example, loose gravel), ABS provides superior vehicle steerability and stability, however there is the potential for stopping distances to be longer than without ABS. This is because locked-up wheels on gravel, etc. tend to plow up the road surface in front of the tires.

Bendix Premium ECUs have an optional ABS off-road control mode that more effectively accommodates these soft road conditions and shortens stopping distances while maintaining optimal vehicle steerability and stability. Care must be taken, however, not to use the ABS off-road mode on normal, paved road surfaces (since vehicle stability and steerability may be reduced), so the ABS Indicator Lamp flashes to show the driver that the ABS off-road mode is being used.

All-Wheel Drive (AWD) Vehicles

AWD vehicles with an engaged interaxle differential (steer axle to rear axle)/AWD transfer case may have negative effects on ABS performance. Optimum ABS performance is achieved when the lockable differentials are disengaged, allowing individual wheel control.

Premium ECUs can be programmed specifically for this configuration to control the differential lock/unlock solenoid in the AWD transfer case. When programmed to do so, the ECU will disengage the locked interaxle/AWD transfer case during an ABS event and reengage it once the ABS event has ended.

ATC Operation

ATC Functional Overview

Just as ABS improves vehicle stability during braking, ABS systems with ATC improve vehicle stability and traction during vehicle acceleration. The ATC function uses the same wheel speed information and modulator control as the ABS function. The ECU detects excessive drive wheel speed, compares the speed of the front, non-driven wheels, and reacts to help bring the wheel spin under control. The ECU can be configured to use engine torque limiting and/or differential braking to control wheel spin. For optimal ATC performance, both methods are recommended.

Differential Braking

Differential braking is automatically activated when drive wheel(s) on one side of the vehicle are spinning, which typically occur on asphalt road surfaces with patches of ice. The traction system will then lightly apply the brake to the drive wheel(s) that are spinning. The vehicle differential will then drive the wheels on the other side of the vehicle. Differential braking is available at vehicle speeds up to 25 MPH.

Advanced ABS

YawS tability

Yaw stability counteracts the tendency of a vehicle to spin about its vertical axis. During operation, if the friction at the tires is not sufficient to oppose lateral (side) forces, one or more of the tires can slide, causing the truck/tractor to spin. These are referred to as under-steer or over-steer situations. Generally, shorter wheelbase vehicles (tractors, for instance) have less yaw stability, while longer wheelbase vehicles (straight trucks) have greater natural yaw stability. Factors that influence yaw stability are: wheelbase, suspension, steering geometry, weight distribution front to rear, and vehicle tracking.

Stability Systems

During operation, the ECU of the Bendix Advanced ABS system constantly compares performance models to the vehicle's actual movement, using the wheel speed sensors of the ABS system, as well as lateral, yaw, and steering angle sensors. If the vehicle shows a tendency to leave an appropriate travel path, or if critical threshold values are approached, the system will intervene to assist the driver.

The ESP® Stability System

The ESP® functionality of the Bendix Advanced ABS system responds to a wide range of low- to high-friction surface scenarios including rollover, jackknife and loss of control. It is the recommended system for all power vehicles and especially critical for tractors pulling trailers. In the case of vehicle slide (over-steer or under-steer situations), the system will remove the throttle and then brake one or more of the "four corners of vehicle" (in addition to potentially braking the trailer), thus applying a counter-force to better align the vehicle with an appropriate path of travel. For example, in an over-steer situation, the system applies the "outside" front brake; while in an under-steer situation, the "inside" rear brake is applied.

In the case of a potential roll event, the system will remove the throttle and quickly apply the brakes to slow the vehicle combination below the threshold.

For color schematics of tractors and trucks see the fold-out cover of this handbook.

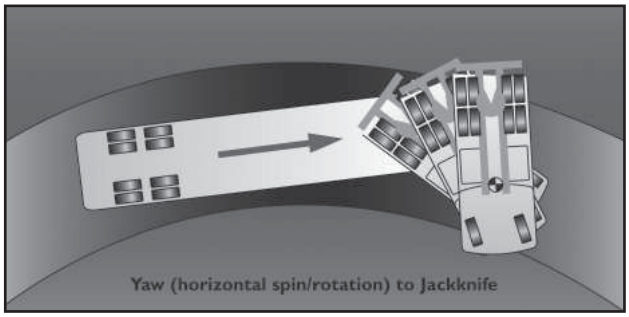

Driving Scenario:

Driving speed exceeds the threshold, and the resulting lateral force causes the vehicle to slide or jackknife on lower-friction surfaces.

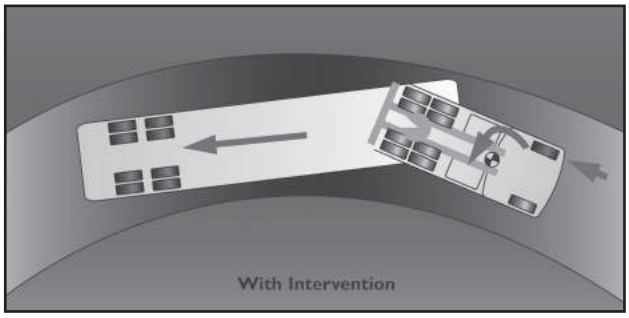

Action by Bendix Stability Solutions:

System applies the appropriate brakes to reduce speed and properly align the vehicle, thereby reducing the tendency to slide or jackknife.

Steering Angle Sensors

The sensor enables the Bendix Advanced stability system to capture the driver's steering input and intervene if a yaw correction is indicated. The sensor also provides the earliest indication of an increase in lateral acceleration leading to a potential roll event, resulting in much higher stability margin when a vehicle is equipped with a steering angle sensor.

Brake Demand Sensors

Bendix Advanced stability system was designed to supplement the drivers actions. By directly measuring driver brake demand, the system can accurately transition between driver-intended and system-intended braking pressure seamlessly. For example, if in a certain maneuver, the system calculates that 40 psi is needed and the driver is only applying 20 psi, the system compensates automatically to deliver the needed 40 psi. If, however, during the same maneuver the driver steps on the brake pedal quickly to apply a higher (above 40 psi) braking level the driver's braking input overrides the temporary change made by the system.

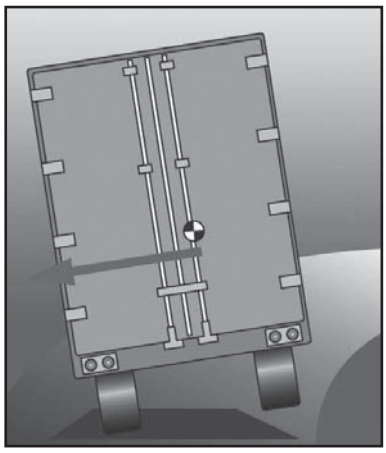

Driving Scenario:

Driving speed exceeds the threshold, creating a situation where the vehicle is prone to rollover on higher-friction surfaces.

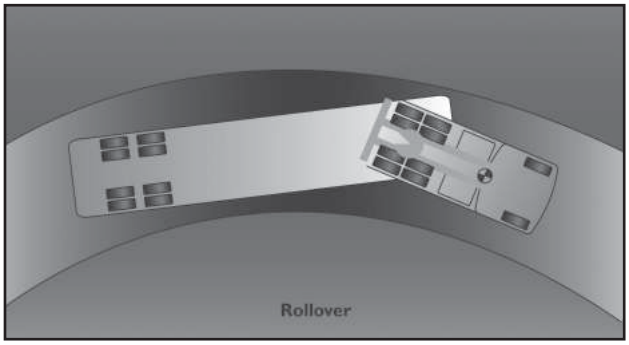

Action by Bendix Stability Solutions:

System applies the brakes to reduce speed, thereby reducing the tendency to roll over.

Stability System Effectiveness

Sense Potential Situations Quickly and Completely		ESP® Stability System
Speed	Measures the vehicle's velocity	✔
Lateral Acceleration	Measures the vehicle's tendency to roll	✔
Steering	Captures the driver's intended direction	✔
Brake Demand	Accurately supplements the driver	✔
Yaw Rate	Measures vehicle spin, and compares it to the steering intention and expected rate of turn	✔
Reaction Time and Robustness		
Multi-Level Sensing	Leading indicators aid reaction Cross checking - helps avoid false interventions	✔
Tuning	Matches data to vehicle configuration and handling characteristics	✔
Braking Control		
All Axle	Maximizes the potential to recover	✔
Individual Wheel	Aids in correcting the vehicle's orientation	✔

During high-speed maneuvers in potential rollover situations, the tandem tires of the tractor and trailer can lift off the ground. If that occurs, the steer axle brakes contribute a much larger percentage of available braking capacity because the wheels that are no longer in contact with the road surface can not provide braking force.

The ability to apply steer axle brakes individually is a fundamental requirement for yaw (spin) control. By applying brakes at any one or all of a vehicle's "Four Corners," the stability system may be able to correct the vehicle's orientation, mitigating the potential for a jackknife, spin-out or slide.

With the potential regulatory requirements for larger front brakes in the future, the steer axle's braking contribution to a vehicle's overall braking capacity and potential stability margin is expected to increase.

ABS / stability system interaction

With Bendix Advanced ABS, the ABS system is given "priority" at the wheel ends to manage wheel slip for optimal braking. The ABS system functions similarly whether the stability system or the driver applies the brakes.

How do I find out more about Advanced ABS?

Visit the ABS area of www.bendix.com, or call 1-800-AIR-BRAKE (1-800-247-2725).

Trailer ABS Components

Typical Trailer ABS components are:

- Bendix Electronic Control Units (ECUs) such as:
  - the TABS-6 standard trailer ABS module,
  - the TABS-6 Advanced (a single channel ABS trailer system) with roll stability control
  - the TABS-6 Advanced MC (a multi-channel version of the advanced trailer ABS system)
  - as well as former Bendix models including the **MC-30™, A-18™** controllers shown on this page.
- Wheel Speed Sensors (see page 35)
- Pressure Modulator Valves (also see page 35)
- ABS Indicator Lamps. The ABS indicator lamp (mandated by government regulations) is illuminated whenever there is an active diagnostic trouble code. This lamp will remain illuminated (whenever the power is on) until the condition is cleared. The lamp may also be used to display diagnostic blink codes when troubleshooting.
- Harnesses

Plus, these last three sensors are located within the module assembly for Advanced trailer ABS:

- Lateral Acceleration Sensors
- Air Suspension Pressure Sensors
- Brake Delivery Sensors
- Brake Demand Sensors

Trailer ABS Operation

Examples of our trailer ABS systems are:

Bendix® TABS-6 controller, a small, scalable, lightweight system. Our TABS-6 unit delivers the patented "Select Smart™" control technology as well as Auxiliary Design Language (ADL), which enables special functions that would normally require their own ECU. Features include:

- Normal braking (operates as a standard relay valve).
- Dolly-axle Control Mode (2S/1M), which uses the wheel behavior monitored by two wheel speed sensors to modulate the braking of one (or two) axles in an ABS event.

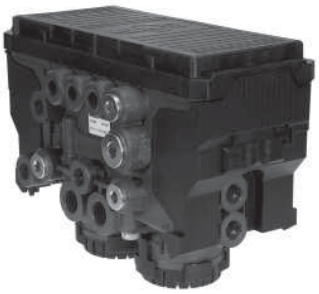

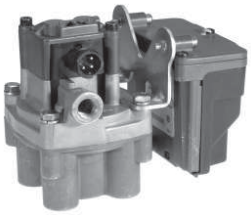

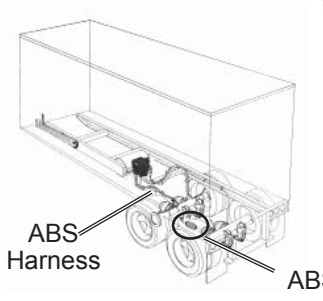

Example of 2S/1M Axle Control ABS Trailer Schematic

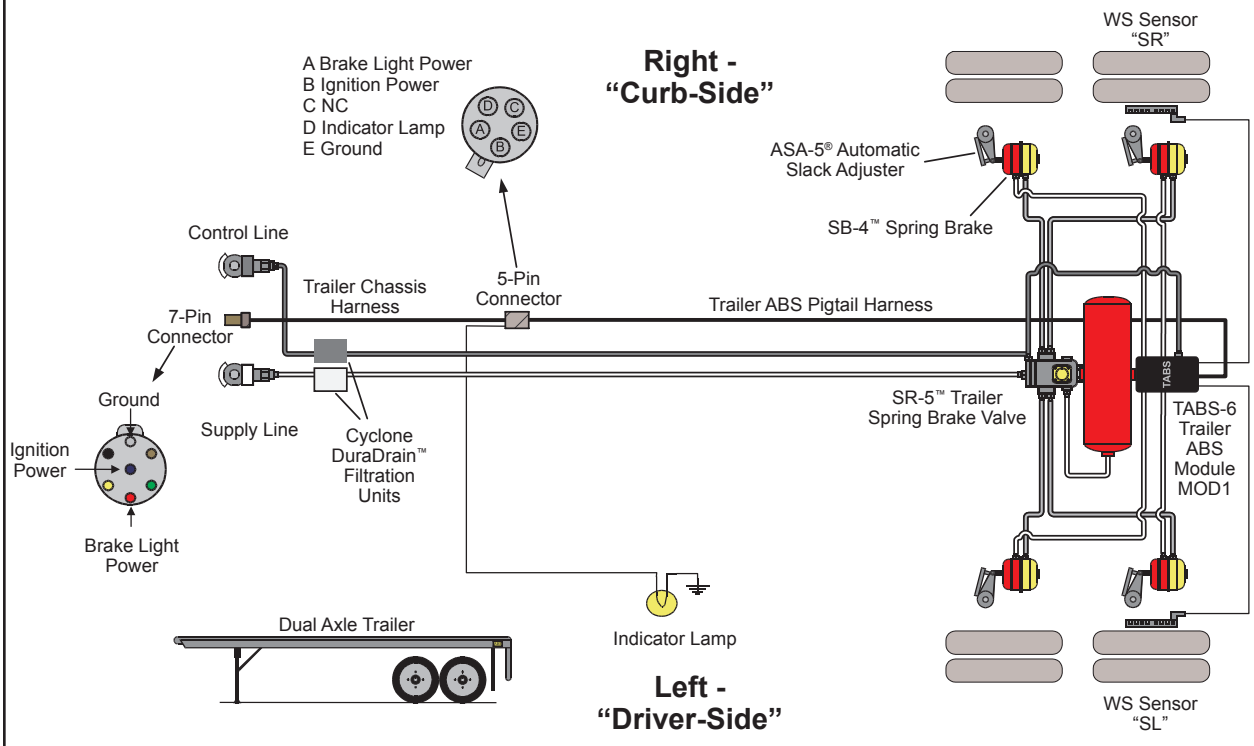

©2009 Bendix Commercial Vehicle Systems LLC • All Rights Reserved

- Axle Control Mode uses a single ABS modulator to control both sides of a given axle or axles.
- Side Control Mode uses ABS modulators to control each side of a vehicle separately. The modulator may control one or more wheels.
- Fail Safe Mode reverts the system to partial, or full, non-ABS braking in the event of certain Diagnostic Trouble Codes (DTCs) being detected.

Additional Trailer ABS Features

Some optional/additional trailer ABS features are:

- Auxiliary Design Language (ADL) which allows customized trailer features to communicate via the ABS ECU with the tractor. Potential examples are: weight, lift axle position, tire temperature and inflation status, slider pin position, refrigeration temperature, load presence, and proximity/reverse alarm.
- Auto-configuration at power-up.
- Customer-defined data storage.
- Odometer functionality, including total, trip and service interval tracking.

Advanced Trailer ABS Features

See the Schematic Diagram at the top of page 43.

Advanced trailer ABS features:

- Trailer Roll Stability Program (TRSP) that reduces the risk of trailer roll-overs during driving by automatic application of the trailer service brakes.
- Modular design with integrated Electronics Control Unit (ECU), pressure sensors, lateral acceleration sensor and Modulator Relay Valve (MRV) — eliminating external pigtail harness for these components.

  Extended operating voltage range: 8 to 32 volts.

The Bendix® TABS-6 Advanced

The Bendix® TABS-6 Advanced system is the first-ever single-channel trailer stability system. The system will intervene automatically when detecting conditions that may lead to a trailer rollover – typically before the driver realizes an intervention is needed. The system – a 2S/1M configuration provides quick and reliable stability performance while simplifying installation and maintenance, and is tank-mountable.

Example of Advanced 4S/2M ABS Trailer Schematic

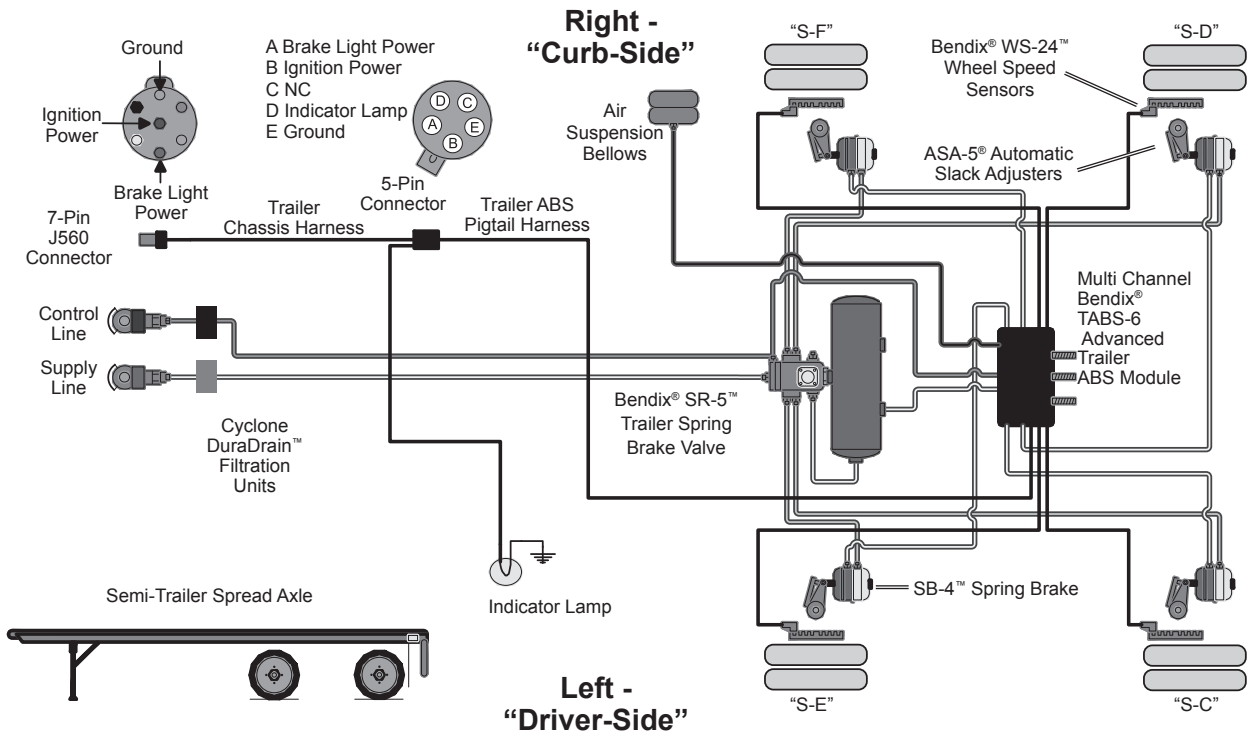

©2009 Bendix Commercial Vehicle Systems LLC • All Rights Reserved

The Bendix® TABS-6 Advanced MC

The Bendix® TABS-6 Advanced MC system provides the same trailer roll stability (TRSP) technology as Bendix® TABS-6 Advanced, along with an adaptable solution for different axle configurations that utilizes two – or three – separately controlled modulators. The Bendix® TABS-6 Advanced MC platform allows for distinct control of either side of the trailer, or it can be configured to control independent axles on a given vehicle. This system is available on configurations ranging from 2S/2M (2 wheel speed sensors/2 modulators) up to 6S/3M (6 wheel speed sensors/3 modulators.)

Controllers with PLC

Since March 1, 2001, all towing vehicles must have an in-cab trailer ABS Indicator Lamp. Trailers transmit the status of the trailer ABS over the power line to the tractor using a Power Line Carrier (PLC) signal (see right panel). Typically the signal is broadcast by the trailer ABS ECU. The application of PLC technology for the heavy vehicle industry is known as "PLC4Trucks."

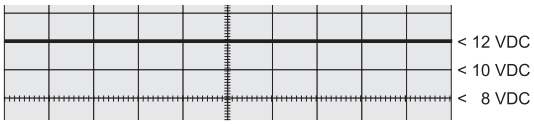

Power Line Without PLC Signal

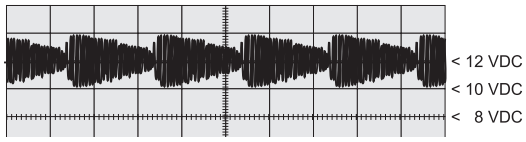

Power Line With PLC Signal

Troubleshooting Truck, Tractor and Trailer ABS

Bendix ECU controllers contain self-testing diagnostic circuitry that continuously checks for the normal operation of internal components and circuitry, as well as external ABS components and wiring. See the Service Data Sheet for the ABS controller for full troubleshooting information.

Diagnostic Trouble Codes: General

When an erroneous system condition is detected, the ECU controllers:

1. Illuminates the appropriate indicator lamp(s) and disengages part or all of the ABS and ATC functions.
2. Places the appropriate diagnostic trouble code information in the ECU memory.
3. Communicates the appropriate trouble code information over the serial communications diagnostic link as required.

Depending on the ECU, the diagnostic trouble codes may be retrieved using "blink codes" (using the dash or trailer ABS indicator lamp), by attaching to the vehicle diagnostic connector a hand-held diagnostic tool, such as the Bendix Remote Diagnostic Unit (RDU™), using a PC-based diagnostic tool such as the Bendix® ACom™ Diagnostics program, or by reading the LEDs on the front of the ECU (such as on the EC-30™ controller).

Bendix® RDU™ (Remote Diagnostic Unit) for Trucks and Tractors*

The Bendix® RDU™ tool provides the technician with a visual indication of ABS component **Diagnostic Trouble Code (DTC)** information. The RDU™ tool is specifically designed for use with Bendix ABS systems and allows the technician to:

- Troubleshoot ABS system component problems using Diagnostic Trouble Code reporting via LEDs.
- Reset Diagnostic Trouble Codes on Bendix ABS ECUs by holding a magnet over the reset in the center of the RDU™ tool (for less than 6 seconds).
- Enter the Self-Configuration Mode used by Bendix ABS ECUs by holding a magnet over the reset area for greater than 6 seconds but less than 30 seconds.

Typical Vehicle Diagnostic Connector Locations

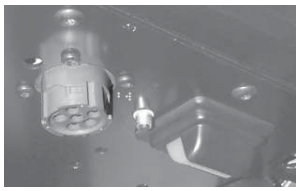

Located on Dash Panel | Or | Located Under Dash Panel

Bendix® Remote Diagnostic Unit (RDU™)

(Blue Label)

LED Lights Illuminate Diagnostic Trouble Codes

Bendix® Trailer Remote Diagnostic Unit (TRDU™)

(Black Label)

LED Lights Illuminate Diagnostic Trouble Codes

TRDU shown with adapter

The trailer version of the RDU™ tool, the TRDU is now available. The TRDU is typically used along with an adapter to provide power for the unit - ask at your local Bendix parts outlet.

Bendix® ACom™ Diagnostics Software

Bendix® ACom™ Diagnostics tool is a PC-based software program and is designed to meet RP-1210 industry standards. This software provides the technician with access to all the available ECU diagnostic information and configuration capability, including: ECU information, diagnostic trouble codes and repair information, configuration (ABS, ATC, and more), wheel speed information, etc.

For free downloads of the latest ACom™ Diagnostics software or information about other RP-1210 compliant tools, go to www.bendix.com (CDs may be ordered online from the Literature Center at bendix.com).

Nexiq Bendix Application Card

Nexiq provides a Bendix application card for use with the Pro-Link tool which works for Bendix® EC-15™, EC-16™, EC-17™, EC-30™/EC-30T™ with PLC, EC-60® standard and premium and TABS-6 standard and premium Bendix ABS Controllers (but not for Advanced ABS systems). For more information on the Bendix application card visit www.bendix.com, Nexiq at www.nexiq.com, or your local authorized Bendix parts outlet.

PC-based Bendix® ACom™ Diagnostics tool

NEXIQ (MPSI) Pro-Link Tool

Pro-Link

Heavy Duty Multi Protocol Cartridge

PC Card MPSI Part Number 805013

Section 7: Additional Systems and Components

Bendix supplies many other products and systems used on commercial vehicles.

Advanced Technologies

Adaptive Cruise with Braking

Bendix® Wingman™ ACB - Active Cruise with Braking is a unique approach to adaptive cruise control technology. Using a small radar sensor mounted on the front of the truck, Bendix Wingman ACB delivers alerts to warn drivers when they are getting too close to a forward vehicle traveling in the same lane. When cruise control is on and set, Bendix® Wingman™ ACB delivers alerts and automatic interventions to help the driver maintain a set following distance behind the forward vehicle. These automatic interventions include dethrottling the truck, engaging the engine retarder, or if more deceleration is needed, applying the foundation brakes.

In addition, Bendix® Wingman™ ACB builds on the full-stability system - Bendix® ESP® stability, which helps to mitigate loss of control and rollover situations on a wide variety of road conditions. The system also delivers information fleets can use in helping to fine tune driver performance. Following distance information and stability events, along with other data, is available for download through Bendix® ACom™ diagnostic software.

The Bendix Wingman ACB - Active Cruise with Braking - system offers fleets a potentially quick return on investment (ROI), through potential accident reductions and possible fuel savings. In the future, this technology will evolve to include other driver assistance systems, such as lane departure warning, blind spot detection and other technologies, providing fleets a proactive approach to help reduce crashes and associated costs.

Tire Pressure Monitoring Systems (TPMS)

Bendix, through its acquisition of SmarTire, now offers a wireless approach to tire pressure monitoring. Using a sensor/transmitter mounted securely inside each tire, a wireless receiver and a dash-mounted display, the SmartWave® TPMS system actively measures the air pressure and temperature within the tires. This information is then sent wirelessly to a receiver mounted on the vehicle or a hand-held display and:

- Alerting the driver of a loss of air pressure or dangerously high tire temperature.
- Informing the fleet manager of tire-related issues by linking through telematics systems.
- Providing tire inflation information to maintenance personnel to help ensure optimum operating conditions.

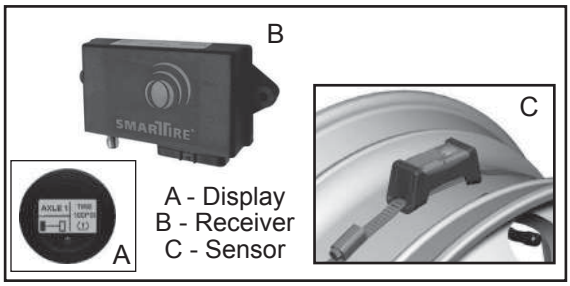

SmartWave technology simplifies and automates the tire maintenance process providing a potential reduction in fleet operating costs and helping improve safety through proactive monitoring and alerting fleet personnel of potential tire inflation and heat issues.

Industry S tandard Technologies

BendixM odules

Beyond component and systems engineering, Bendix develops and manages integrated vehicle solutions by partnering with vehicle manufacturers. These joint development projects use program management and engineering expertise at Bendix to help our customers develop new vehicle designs and shorten the time taken to bring these vehicles to the marketplace.

For more information, contact Bendix at:

info@bendix.com

Pre-Trip Safety Inspections

The Bendix® BVA-85™ brake valve actuator enables pre-trip brake inspections safely and easily with only one person. It uses air from the trailer supply of the Bendix® MV-3® valve to keep the foot pedal applied at an accurate 85 psi service brake application.

This valve is also used as a work brake for unique systems, e.g. to apply the service brakes for door interlock systems for transit and school bus applications, refuse interlock systems, and other severe service vehicle interlock systems including paving and construction.

BVA-85™ Brake Valve Actuator

Fan Clutches

Fan clutches are air-operated, normally engaged, on-off clutches that control the engine cooling fan. The fan clutch senses the engine coolant temperature and maintains engine temperature by engaging or disengaging the cooling fan. Using a fan clutch helps conserve fuel and engine efficiency, and it leads to faster warm-ups and a quieter vehicle. Bendix recommends snap-action electronic fan clutch controls for both performance and reliability.

The FD-L™ and FD-3™ fan clutches are designed to be fail safe. Both models feature spring engagement and air disengagement.

Most later model vehicle/engine combinations are available in kit form and contain all the necessary parts for installation. Control kits are also available, including those for shutter-equipped and air-conditioned vehicles.

FD-L™ Fan Clutch

FD-3™ Fan Clutch

Caution: Fan bolts must not enter the fan plate more than ½ inch or less than 3/8 inch.

Section 8: The Fundamentals of Air Braking

Friction

Air brakes are mechanical devices that use friction to slow or stop vehicles. An understanding of the laws of friction will be a useful introduction to the concepts behind brake design and maintenance.

Coefficient of Friction

Friction is the resistance to relative motion between any two bodies in contact, and it varies not only with different materials, but also with the condition of the materials. The amount of friction developed by any two bodies in contact is referred to as their coefficient of friction, which is the amount of force required to move the one body while it remains in contact with the other.

The coefficient of friction is expressed by the relation of the amount of force divided by the weight of the moving body. Let's look at three examples:

In Figure 1, example (a), if the moving body weighs 100 pounds, and a force of 60 pounds is required to keep it moving while it remains in contact with another body, then the coefficient of friction between the two bodies is 60% or 0.6. For (b), if 50 pounds force is necessary to keep it moving, the coefficient of friction is 50% or 0.5. For (c), if only 35 pounds force is required, the coefficient of friction is 35% or 0.35.

The coefficient of friction between any two surfaces changes with any variation in the condition of one or both surfaces. As an example, the introduction of oil or grease between two dry, flat metal surfaces will greatly reduce the friction between them, which demonstrates that the condition of these surfaces plays a great part in the actual friction they develop. This possible variation in the coefficient of friction is always present when any factor contributing to the frictional value of any material is subject to change either permanently or temporarily.

Heat is always present where friction is being developed. For example, when a bearing is not properly lubricated, the lack of lubrication causes a rise in the coefficient of friction with a resultant rise in the heat produced. The heat may reach a point where the bearing fails.

Energy of Motion Becomes Heat Energy

Since friction is the resistance to relative motion between two bodies in contact and since friction results in heat, a more complete definition of a brake would be that it is a mechanical device for retarding the motion of a vehicle by means of friction, thereby changing the energy of motion into heat energy.

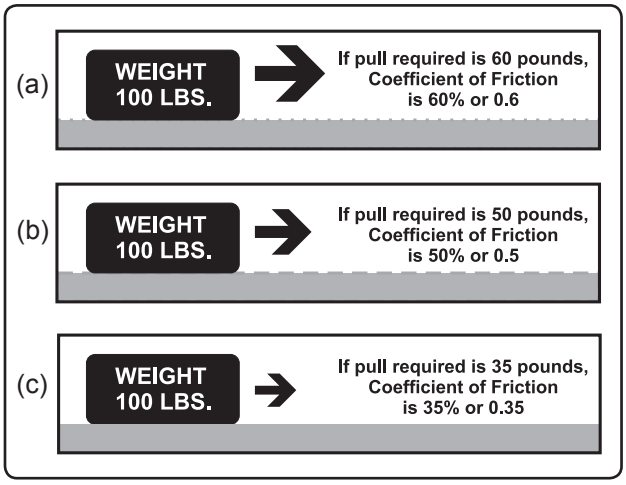

FIGURE 1 - COEFFICIENT OF FRICTION

Stated another way, when the speed of a vehicle is reduced by applying the brakes, the energy of motion is actually changed into heat energy, and the brakes must dissipate or absorb the heat developed.

Braking Force

It is difficult to appreciate the tremendous forces involved in stopping a modern commercial vehicle, particularly from the higher speeds.

A simple method of explaining this is to make a comparison between the horsepower required to accelerate a vehicle and the horsepower required to stop it. A truck with an engine capable of developing 100 horsepower will require about one minute to accelerate to 60 miles per hour. The same vehicle should be capable of easily stopping from 60 miles per hour in not more than six seconds. Ignoring the unknown quantities, such as rolling friction and wind

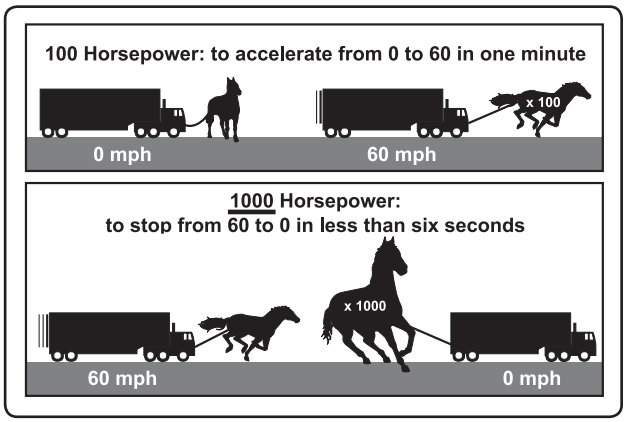

FIGURE 2 - FORCES INVOLVED IN BRAKING

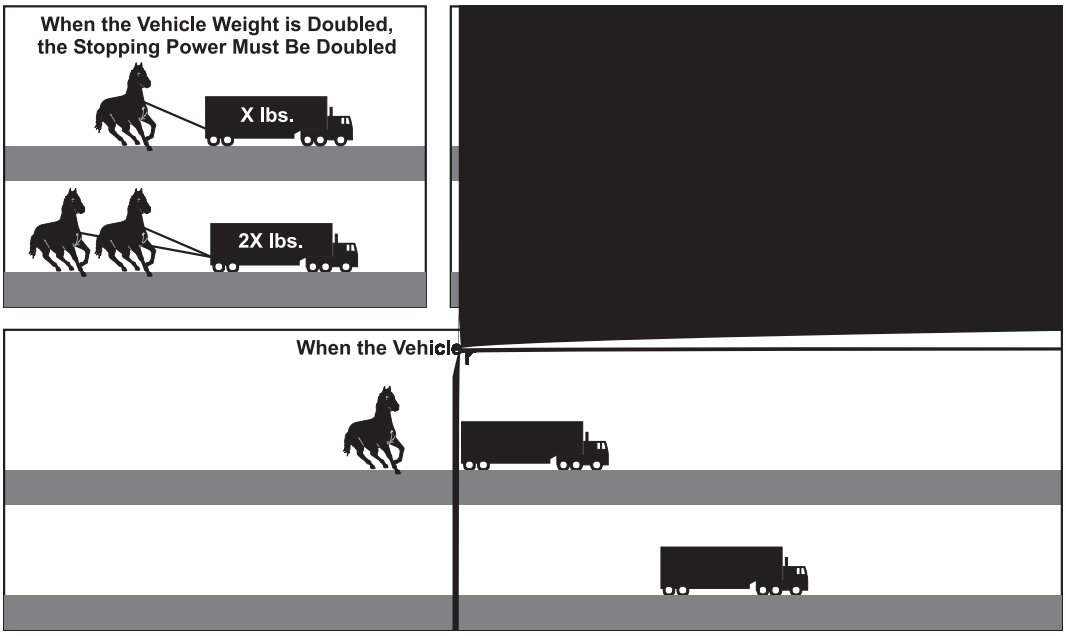

FIGURE 3 - EFFECT OF WEIGHT AND SPEED ON BRAKING FORCE REQUIRED

Introducing both weight and speed into the comparison again, a 10,000 pound vehicle traveling 60 miles per hour has 18 times as much energy of motion as a 5,000 pound vehicle traveling at 20 miles per hour. If the same stopping power is used, a 5,000 pound vehicle which stops from 20 miles per hour in 30 feet, when loaded to 10,000 pounds and is traveling at 60 miles per hour will require 18 times (540 feet), or more, to stop. Note: Many other factors, including the road surface, brake friction material and tire condition, etc. would also affect the stopping distance.

Leverage

Having reviewed the forces involved in braking a vehicle, consideration must also be given to how these forces are developed and directed to do the braking work. Almost all braking systems make use of one of the oldest mechanical devices governing the transmission and modification of force and motion, the lever.

A lever is defined as an inflexible rod or beam capable of motion about a fixed point called a fulcrum, and it is used to transmit and modify force and motion.

Figure 5 illustrates three simple types of levers; the only difference in them being the location of the fulcrum in relation to the applied force and the delivered force. All shapes and sizes of levers used in a typical brake system are one of these three types.

The simple law of levers is that the applied force multiplied by the perpendicular distance between the line of force and the fulcrum always equals the delivered force multiplied by the perpendicular distance between the fulcrum and the line of force. Thus, with a leverage arrangement as shown in view 5(a), an applied force of 100 pounds two feet from the fulcrum will give a delivered force of 200 pounds at a point one foot from the fulcrum. With a leverage arrangement as shown in Figure 5(b), an applied force of 100 pounds three feet from the fulcrum will lift 300 pounds at a point one foot from the fulcrum.

Note that in both cases the delivered force exceeds the applied force because the applied force is farther from the fulcrum than the delivered force. With a leverage arrangement as shown in Figure 5(c), the delivered force is the farthest from the fulcrum; therefore, it is less than the applied force. If the applied force in this case is 300 pounds at a point two feet from the fulcrum, the delivered force at a point three feet from the fulcrum will be 200 pounds.

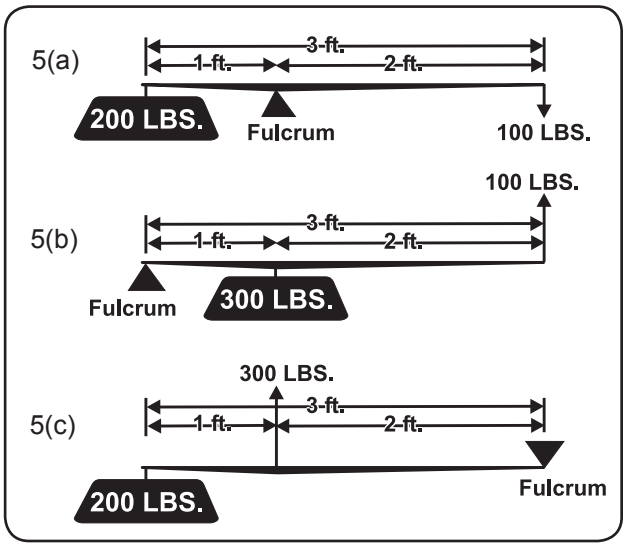

FIGURE 5 - LEVERAGE

The delivered force of any lever is determined by multiplying the applied force by the distance it is from the fulcrum and then dividing this answer by the distance the delivered force is from the fulcrum.

In determining the distance at which any force is acting on a lever, the true length of the lever arm is the perpendicular distance from the force to the fulcrum, regardless of the shape of the lever. The lever arm is always measured at right angles to the direction of the force.

The product of the force acting on a lever, multiplied by the distance the force is from the fulcrum, is called the turning moment, and when this relates to a shaft, it is called torque. The turning moment or torque is usually expressed in inch-pounds, foot-pounds, foot-tons, etc., depending upon whether the force is measured in pounds or tons and whether the distance is measured in inches or feet. As an example – a force of 100 pounds acting on a lever arm five inches long would result in a turning moment or torque of 500 inch pounds.

The most easily recognized lever in an air brake system is the slack adjuster. The length of the lever arm of a slack adjuster is always the perpendicular distance between the center line of the brake camshaft opening and the center line of the clevis pin.

Another form of lever – not always recognized – is the brake cam. All brake cams are levers and are used to transmit and modify the torque and turning motion of the brake camshaft in such a way that the brake shoes are spread and forced against the brake drum, not only in the proper direction but also with the proper force. Spreading the shoes in the proper direction, of course,

depends on the proper location of the cam in respect to the location of the brake shoes. The transmission of the proper force is partially determined by the effective lever length of the cam. If the effective lever length of the cam is too long or too short, the brake shoe force will be correspondingly too little or too much.

It is also important that the effective lever length of the cam remains constant as the lining wears and the shoes have to be spread further; otherwise, the brake performance would vary as the lining wears.

Another form of lever found in drum-brake forms of braking systems is the brake shoe. This is one of the simpler forms because it is easily recognized as a beam, fulcrumed at one end on the hinge pin, which forces the brake lining against the drum when the brake cam force is applied to the other end.

Perhaps the least easily recognized lever in a drum brake system is the relation of the brake drum diameter to the tire diameter. In order to understand this fully it must be remembered that although the brakes stop the brake drums and wheels, it is always the tires and road surface that stop the vehicle. This is clearly demonstrated when quick stops are attempted on wet or icy roads. Under these conditions the brake equipment may still be as efficient as ever in stopping the wheels, but its ability to stop the vehicle quickly diminishes because there is not sufficient friction between the tire and road to develop the necessary retarding force.

Returning to the principles of leverage involved in the relation of the tire and brake drum size, the retarding force developed by the brake shoes acting against the drum is working on an effective lever length of the brake drum radius. Counteracting this is the retarding force developed between the tire and the road, working on an effective lever length of the rolling radius of the tire. Since it is not practical to have brake drums as large as the tires, the principles of leverage require development of a greater retarding force between the brake shoes and the drums than between the tire and the road. Also, since a rubber tire on a smooth, dry road surface has a higher coefficient of friction than brake lining against a brake drum, it is necessary to develop additional retarding force between the brake shoes and brake drum in order to overcome the difference in friction.

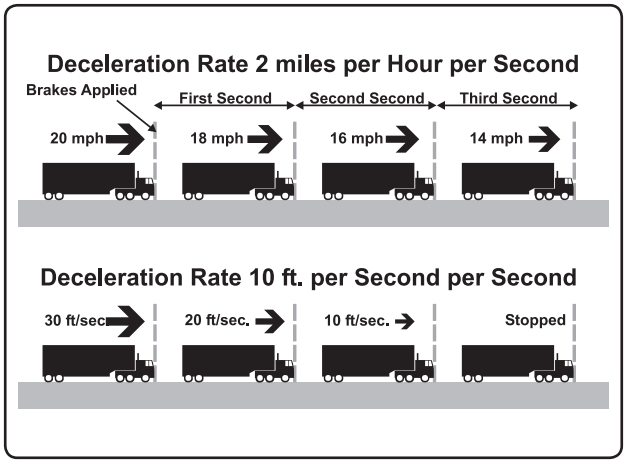

FIGURE 6 - DECELERATION

Deceleration

In discussing brakes, the term deceleration is often used. This term expresses the actual rate at which vehicle speed is reduced and usually denotes the speed being reduced each second, in terms of miles per hour or feet per second.

As an example as shown in Figure 6 - if a vehicle is moving at the rate of 20 miles per hour, and one second later its speed is only 18 miles per hour, the vehicle has reduced its speed by two miles per hour during one second, its deceleration rate is two miles per hour per second.

In the same way, if a vehicle is moving at a rate of 30 feet per second, and one second later its speed is only 20 feet per second, then it is decelerating at the rate of ten feet per second per second.

Therefore, the change in the rate of speed of a vehicle during a slowdown or stop is expressed by first stating the rate of speed being lost, such as miles per hour or feet per second, and then by stating the time required for this rate of speed to be lost.

Thus, in examining the expression covering a deceleration rate of say, “ten feet per second per second,” the first part – “ten feet per second” – is the rate of speed being lost, and the second part – “per second” – is the time in which the loss of ten feet per second takes place.

If a vehicle is moving at a known rate, and is decelerating at a known rate, the stopping time will be the initial speed divided by the deceleration rate, provided both the rate of speed and the deceleration rate are expressed on the same basis. As an example – if a vehicle is moving at the rate of 30 feet per

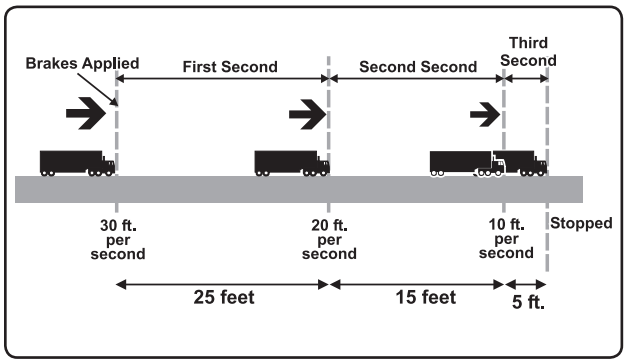

FIGURE 7 - DECELERATION AT 10 FEET PER SECOND PER SECOND

second and is decelerating at the rate of ten feet per second, the stopping time will be the initial speed of 30 feet per second divided by the deceleration rate of ten feet per second per second, or a stopping time of three seconds.

This perhaps can be more easily understood if explained in the following manner; if a vehicle is moving at the rate of 30 feet per second and begins to decelerate at the rate of ten feet per second per second, at the end of the first second it will be traveling 20 feet per second; at the end of the second second, it will be traveling ten feet per second, and at the end of the third second, it will be stopped. Thus, by losing speed at the rate of ten feet per second per second, it would lose its initial speed of 30 feet per second in three seconds.

Similarly, if the initial speed is 20 miles per hour and the deceleration rate is two miles per hour per second, the stopping time will be ten seconds.

One important thing to remember in respect to stopping vehicles is the fact that while the deceleration rate may be constant for each second during the stop, the distance the vehicle travels each second during the stop varies greatly as the speed decreases.

This is illustrated in Figure 7 which also shows a vehicle decelerating at the rate of ten feet per second per second from an initial speed of 30 feet per second, but the positions of the vehicles are shown in relation to the distance traveled each second during the stop. This shows that although the rate of deceleration remains constant throughout the stop, the vehicle actually travels 25 feet during the first second after the brakes were applied, 15 feet during the second second, and only five feet during the third second.

The distance being traveled each second during the stop is always greater at the beginning of the stop. To keep stopping distance as short as possible, it is important that the brakes become fully effective when the pedal is depressed by the driver.

Any time lost between the instant the brake pedal is depressed and the instant actual deceleration begins is important because the vehicle continues to travel at close to its initial speed. In this case, the loss of only one second between the instant the driver depresses the brake pedal and the point where the brakes are really applied will result in lengthening the actual stopping distance by 30 feet. Thus, if four seconds instead of three elapse between the instant the driver depresses the brake pedal and the instant the vehicle stops, the actual stopping distance will be increased from 45 feet to 75 feet. In other words, by reducing the stopping time under these conditions by only one second or 25%, the actual stopping distance is reduced by 30 feet or 40%.

It is this part of brake fundamentals which is not often considered in evaluating brake performance, particularly when different forms of brakes are involved. A common method of testing brakes is by the use of a decelerometer–a device that determines the maximum rate of deceleration developed during a stop and which shows a calculated stopping distance from a speed of 20 miles per hour based on the maximum rate of deceleration developed during a stop. Such instruments do not, however, make allowances for lost time before the braking system develops full power and therefore are not suitable for analyzing time lag factors in brake performance.

The true performance of any type of brake system in terms of stopping time or stopping distance can only be determined by actually measuring the time and distance the vehicle travels from the instant the driver depresses the brake pedal to the point where the vehicle actually stops. Such tests can, of course, be made comparative only by using instruments to determine accurately the speed of the vehicle at the instant the brake pedal is depressed.

In so far as brakes are concerned, a driver is mainly interested in the amount of time and the distance required to bring the vehicle safely to a stop under emergency conditions as measured from the instant he or she depresses the brake pedal. Any lag in the time between the instant the brake pedal is depressed, and the instant the brakes apply, affects stopping distance.

The Fundamentals of Compressed Air

Compressed air is air which has been forced into a smaller space than that which it would ordinarily occupy in its free or atmospheric state.

Free air which we breathe – or atmosphere – is normally always under pressure because of the weight of the air above it. This pressure amounts to 14.7 pounds per square inch at sea level, and it decreases as the altitude increases.

The normal atmospheric pressure of 14.7 pounds per square inch is usually ignored and the atmosphere is considered as being free air under no pressure. Thus, the pressure of compressed air is commonly indicated by stating the amount the pressure, in pounds per square inch, is above the atmosphere. This is the reason air pressure gauges register zero when connected only to atmosphere.

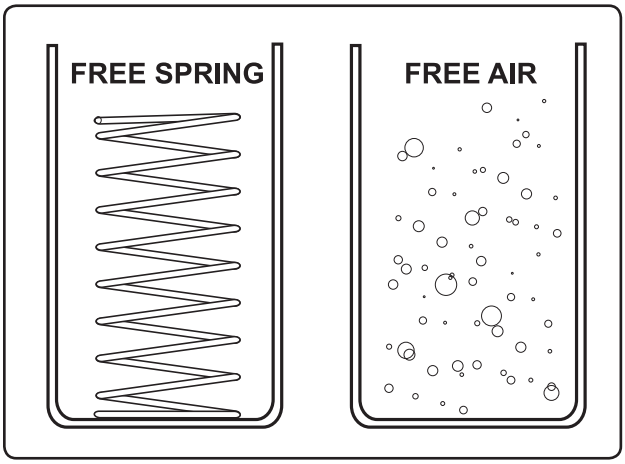

FIGURE 8 - FREE SPRING / FREE AIR

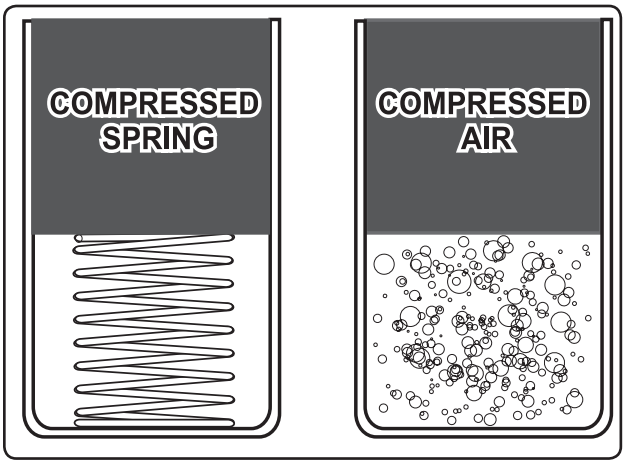

FIGURE 9 - COMPRESSED SPRING / COMPRESSED AIR

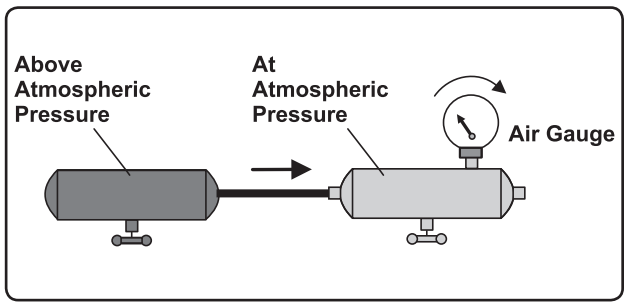

FIGURE 10 - FREE SPRING / FREE AIR

FREE SPRING – FREE AIR

The energy of compressed air is best compared to the energy of a coiled spring. Figure 8 shows a coiled spring in its free position and air in its free or atmospheric state.

COMPRESSED SPRING – COMPRESSED AIR

When the spring is compressed, as shown in Figure 9, energy is stored in it. Similarly when free air is compressed, energy is stored in the air. This energy can be used to do work, and due to the flexibility of air such energy can be stored in a relatively small space.

See Figure 10. If two reservoirs are connected and one contains air above atmospheric pressure and the other contains air at only atmospheric pressure, air will flow from the reservoir with the higher pressure until the pressures in both reservoirs equalize or until the flow is interrupted by some outside force, such as the closing of a valve in the connecting line. This is similar to the action of liquids, except that pressure is the controlling medium, whereas, the force of gravity would ordinarily be the controlling medium in the case of liquids.

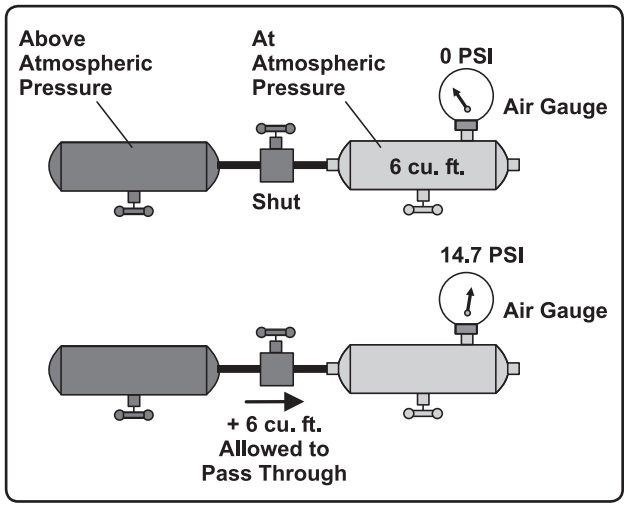

FIGURE 11 - FREE SPRING / FREE AIR

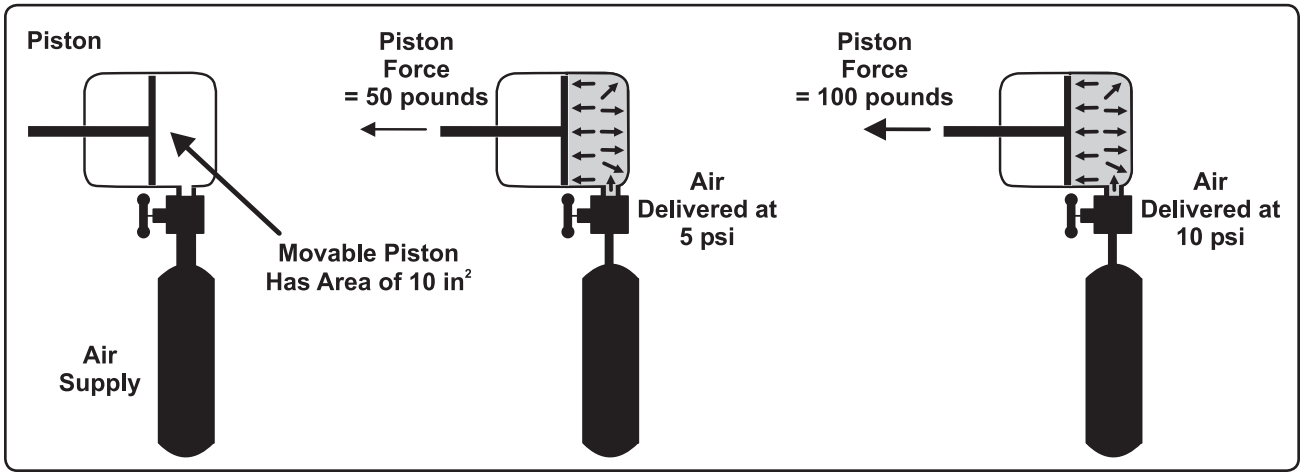

FIGURE 12 - FUNDAMENTALS OF COMPRESSED AIR

We saw earlier that normal atmospheric air is really at a pressure of 14.7 pounds per square inch. In Figure 11, the reservoir on the right has a volume of six cubic feet. When another six cubic feet of air is added into it, the gauge pressure of the air in the reservoir, which originally read zero, will rise to 14.7 pounds. It follows that each time a quantity of free air equal to the volume of the reservoir is forced into it, the gauge pressure will rise another 14.7 pounds per square inch.

In Figure 12, we see a piston with an air-tight chamber behind it. When compressed air enters the chamber it will cause the piston to move until it encounters a resistance equal to the force developed by the compressed air. Because the air pressure is based on pounds per square inch, it follows that the compressed air will develop a force in pounds on the movable object equal to the product of the air pressure multiplied by the effective area of the movable object. If a piston or a flexible diaphragm in a brake chamber has an area of ten square inches and air at five pounds per square inch pressure is acting on the piston or diaphragm, the developed force will be 50 pounds. Similarly, if air at a pressure of ten pounds per square inch is acting upon it, a force of 100 pounds will be developed.

One key point is that the quantity of air acting on the piston or diaphragm does not affect the force developed. The only factors involved are the air pressure and the area of the piston or diaphragm on which the air pressure is acting. This means that we can control the force applied by the braking system by controlling the air pressure.

The pressure exerted by compressed air is not only developed in all directions, but it is also equal in all directions. The compressed air in a reservoir exerts pressure equally in all directions against the entire inside surface of the reservoir (the pressure of the compressed air being overcome by the mechanical strength of the reservoir walls). Similarly, the force developed by the air pressure acting on one side of a piston or a diaphragm may be overcome by an opposing force acting on the opposite side, and the opposing force may be compressed air or it may be mechanical. If the opposing forces are equal, a balanced condition is reached and there is no movement of the piston or diaphragm. If the opposing forces are not equal, the piston or diaphragm will move, if possible, to assume a position where the opposing forces are equal. See Figure 13.

This law of balanced pressures and forces is the basic principle governing the design and operation of the control and actuating devices in an air brake system.

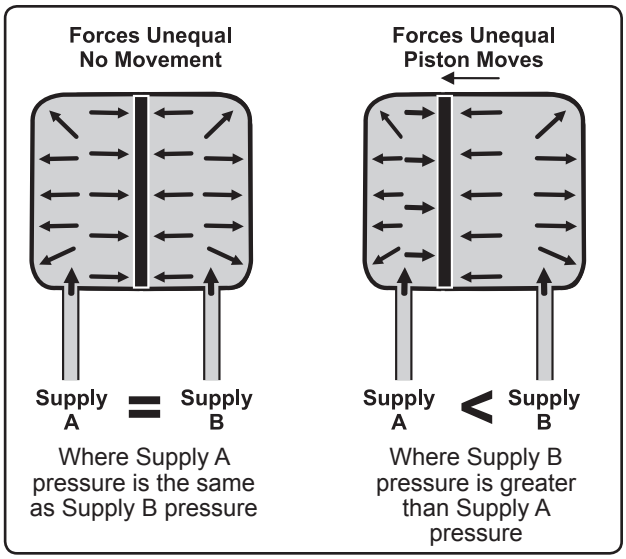

FIGURE 13 - FUNDAMENTALS OF COMPRESSED AIR

The Fundamentals of Compressed Air Brakes

Compressor, Reservoir and Brake Valve

In an air brake system, the compressor supplies the compressed air for brake operation by taking free air and compressing it to 100-120 P.S.I. (Maximum pressure in an air brake system is generally 150 P.S.I.)

The compressed air passes from the compressor into the reservoir and the air brake system where it (and its energy) are stored until needed by the driver for a brake application.

Service Brake System

When the brake valve is operated by the driver, air flows to the chambers where its energy is transformed into the mechanical force and motion necessary to apply the brakes.

Braking Forces - Effect of Air Pressure

This control of the braking force by controlling the air pressure in the chambers is illustrated in Figure 14. It shows the resulting forces in pounds of various air pressures with a chamber having an effective diaphragm area of 24 square inches.

The important point is that the air pressure in a brake chamber can be controlled so the brake chamber will develop the required force.

Braking Forces - Effect of Brake Chamber Size

Different sizes of vehicles and different axles of the same vehicle may require different braking forces, depending on the weight of the vehicle or the weight distribution between axles of the same vehicle. These variations in the braking force are design variations because the maximum and minimum force required must be properly provided before good performance can be obtained throughout the entire braking range. [Note: Rotochambers are larger, heavier style of brake chamber typically used on heavier, off-road equipment where their constant output and longer push-rod stroke is useful.]

Figure 15 illustrates the developed force in pounds of each of several different sizes of brake and rotochambers when supplied with air pressure at 60 pounds per square inch. The effective area of the different brake chambers generally varies from six square inches to 36 square inches and their developed force at 60 pounds air pressure generally varies from 360 pounds to 2,160 pounds. This permits the choice of a chamber size suitable for properly operating any size or type of foundation brake.

Typical 'Type-24' Brake Chamber Having an Effective Diaphragm Area of 24 Square Inches.

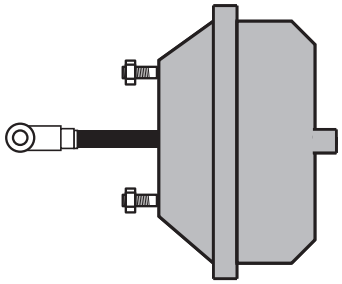

Air Pressure (PSI)	5	10	20	30	40	60	80	100
Developed Force (PSI)	120	240	480	720	960	1440	1920	2400

FIGURE 14 - BRAKING FORCES-EFFECT OF AIR PRESSURE

Force Developed by Various Size Brake and Rotochambers at 30 and 60 psi.

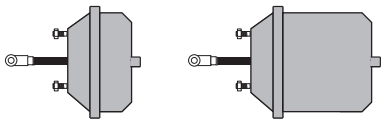

Clamp Ring Brake Chamber or Rotochamber	6	9	12	16	20	24	30	36	50*
Effective Area of Diaphragm (square in.)	6	9	12	16	20	24	30	36	50
Pounds of Force Developed @ 30 psi	180	270	360	480	600	720	900	1090	1500
Pounds of Force Developed @ 60 psi	360	540	720	960	1200	1440	1800	2160	3000

* Rotochamber only

FIGURE 15 - BRAKING FORCES-EFFECT OF BRAKE CHAMBER SIZE

Braking Forces - Effect of Slack Adjuster Arm Length

Figure 16 illustrates how the principles of leverage apply when a brake chamber and slack adjuster combination is being selected to meet specific requirements.

With the same brake chamber force of 1,000 pounds, the torque on the brake camshaft can be increased from 4,000 inch pounds to 6,000 inch pounds merely by using a slack adjuster with a 6” arm instead of one with a 4” arm.

In an S-Cam foundation brake, the full range of braking forces for any vehicle is provided by the use of different sizes of brake chambers and slack adjusters.

A term which is used to express the relation of the brake chamber size and slack adjuster arm length is “AL” factor. The “AL” factor differs from torque or turning moment in that only the variable factors which determine the force are expressed. The reason for this is that an air pressure of 60 pounds is generally used in calculating air braking forces and therefore, is considered constant. The length of the slack adjuster lever arm and the size or effective area of the brake chamber acting on the slack adjuster are the two variables altered to meet braking requirements. The product of the effective area of the brake chamber and the length of the slack adjuster arm is expressed as the “AL” factor, which, when multiplied by the 60 pounds air pressure used in making brake calculations, determines the torque on the brake camshaft. As an example: If a brake chamber having an effective area of 16 square inches is acting on a slack adjuster having an arm length of five inches, the “AL” factor is 80. The actual torque on the brake camshaft is therefore the “AL” factor (80) multiplied by the air pressure used in making brake calculations (60), or 4,800 inch pounds.

Bendix Air Disc Brakes

Bendix Air Disc Brakes (ADB) are “floating caliper” pneumatic disc brakes for use as the foundation braking on all axles of heavy commercial vehicles and trailers. Air Disc Brakes are easier to service than traditional S-Cam brakes. Air Disc Brakes are available in models with or without spring brakes.

The function of the ADB is to convert the air pressure applied when the driver applies the brakes into braking force against the rotor on the vehicle wheel. This is done by the application of air from the foot brake or relay valve entering the brake chamber causing the plate to move the push rod outwards. The push rod exerts force on the lever (see Figure 17) and this force is transferred and multiplied as it turns around the eccentric bearing. The bearing and the connected actuating beam move outward, overcoming the force of the two return springs. The force is then transferred to the two threaded tubes, tappets and finally to the inner and outer brake pads.

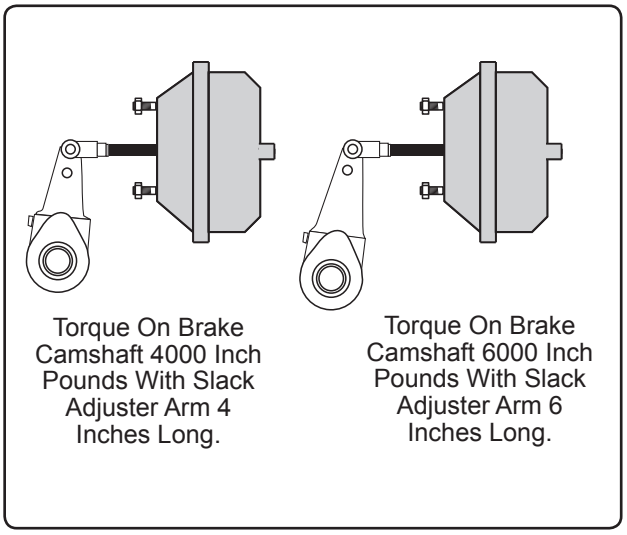

FIGURE 16 - BRAKING FORCES-EFFECT OF SLACK ADJUSTER ARM LENGTH

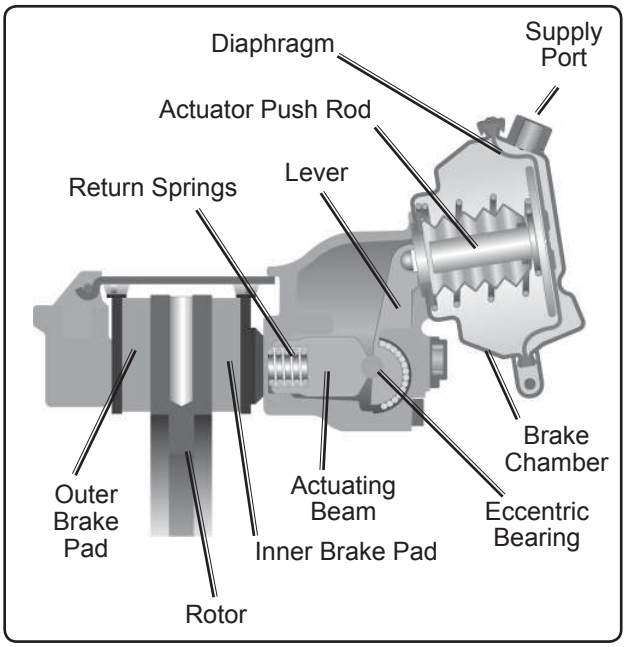

FIGURE 17 - AIR DISC BRAKE - CUT-AWAY VIEW

Air Brake System Balance

The air brake system is one of the most important safety systems on a vehicle. Air brake systems are carefully designed with valves, tubing or hoses, etc., selected to result in balanced vehicle braking performance - one where all the brakes apply as close to simultaneously as possible and with the desired amount of force. Proper vehicle maintenance will result in the original performance being retained, and so component replacement and general brake system maintenance are very important. Routine system maintenance operations should be performed with this in mind.

Two major areas that we cover here are:

I. Pneumatic (Air) and II. Mechanical.

I. Pneumatic (Air) Systems

General

An ideal or balanced braking system is one in which the braking pressure reaches each actuator as close to simultaneously as possible and at the same pressure level (and at an appropriate level to achieve torque balance with respect to the axle's loading). We recommend downloading the BW1555 Air Pressure Balance & Threshold Pressure Tests worksheet from the Literature Center at www.bendix.com.

Transmission Time

Vehicle manufacturers must comply with the air system timing requirements of Government regulations (e.g. U.S. FMVSS 121, Canadian CMVSS 121). In establishing this performance, vehicle manufacturers carefully select tubing and hose sizes. Air application and release performance is partially dependent upon the size and volume of chambers, vehicle weights and locations of the valves and chambers, or distance the air must travel. Performance is engineered into the vehicle by the manufacturer; the role of the vehicle owner and/or mechanic is to preserve that pneumatic performance. Here are a few tips to assist in that effort.

Tubing

When replacing tubing or hoses, always replace with DOT or SAE approved tubing of the same size. These sizes have been determined by the vehicle manufacturer to obtain desired performance. If copper tubing is used, always make sure to ream and de-burr the tubing after cutting. Check carefully for restrictions such as kinking or bending, and make sure tubing and hoses are properly supported. Use the proper size fittings and make certain they are not restricted. As a rule, do not replace straight fittings with elbows. Note: it takes as much time for air to flow through an elbow fitting as through 6-7 feet of tubing or hose.

Valving

When replacing valves in the air brake system, be sure that the function of the replacement valve is comparable with the valve being replaced. Wherever possible, we recommend genuine Bendix parts be used. Then you can ensure that the new valve is equal in performance to the original. Bendix adheres to an industry recommendation which requires that, for some valves, the valve type and some of its critical characteristics are identified by a metal tag or washer to help select the correct replacement. (For example: relay valve crack pressures.)

Air System Contamination

Air brake systems need clean air to function at their best. Almost all vehicles with air brakes now use an air dryer to remove contaminants from the air before it enters the system.

A properly maintained desiccant-type air dryer will remove almost all the water vapor and oil droplets present in the compressed air arriving from the air compressor.

Typically, air dryer cartridge replacement intervals are:

- Every 3 years/300,000 miles for a low air use vehicle (e.g. line haul, single trailer, with 5 or less axles) or,
- Every year/100,000 miles for a high air use vehicle (e.g. refuse truck, transit bus, bulk unloader, or line haul with 6 or more axles.)

A properly maintained air dryer will substantially reduce the potential for freeze-ups in the system.

If for some reason an air dryer is not in use, daily reservoir draining can help reduce the amount of contamination in the system. While reservoir draining can not eliminate valve contamination, it can reduce the amount.

Trailer Air System Contamination

Contamination by insects, fibrous material, etc. can affect trailer air brake systems. The Cyclone DuraDrain™ trailer water separator installed in the trailer control and/or supply lines near the gladhands where it self-purges liquid contaminates, contains solid contaminants and improves the life of the trailer system components. Other Bendix products that work to help trailer air system are: the AF-3™ in-line air filter screens out foreign material from trailer air lines; and the System-Guard® trailer air dryer which removes moisture and contaminates from the trailer air system.

II. Mechanical Systems

General

Vehicle manufacturers must also comply with Government regulations for braking performance (e.g. U.S. FMVSS 121, Canadian CMVSS 121). As with the air or pneumatic side of the system, the vehicle manufacturer must carefully design the brake geometry, size and power of the foundation brake components to achieve the desired vehicle performance. Maintenance personnel must likewise strive to maintain this performance.

Actuators

Brake chambers convert air pressure into mechanical force. Always maintain the chambers to their original performance condition. If chamber return springs need replacement, the springs should be replaced with springs of the proper spring load. When replacing, remember the chamber return spring affects the net force delivered by the chamber, and is especially important in low service brake applications. For this reason always replace the return spring on both chambers on an axle.

Chamber diaphragm life will vary according to the type of service and the diaphragm environment. Experience will generally dictate replacement frequency, and it is good practice to replace all diaphragms on the vehicle at the same time.

Also, in the case of S-Cam brakes, make sure the chamber push rods are in line with the slack adjusters. If misaligned, the chamber rod can rub on the chamber's non-pressure plate and cause a dragging brake.

Another factor that influences the brake chamber output force is the chamber push rod length. Ideally, the push rod length should be adjusted so that when the chamber reaches half its maximum stroke a 90 degree angle (approximately) is formed between the slack adjuster and chamber push rod.

Foundation Brakes

Braking torque is established by the vehicle manufacturer and is determined by the designed axle weight. Brake size (diameter), brake block or pad characteristics and the foundation brake design (S-Cam, air disc, etc.) influence brake torque. In the case of S-Cam brakes, the torque is carefully evaluated in relation to drum capacity, drum area, and lining area and in the case of air disc brakes, rotor/pad specifications. It is recommended that you consult the vehicle manufacturer before attempting any changes that would affect brake torque.

Mechanical friction within the foundation brake can affect brake output torque. The components of the foundation brake are subject to high forces and should be periodically checked and lubricated as necessary.

Friction material (e.g. brake block and lining segments, etc.) affect vehicle stopping performance and are a factor in wear balance from front to rear. Replacement material should be chosen for its stopping performance as well as wear characteristics. At a minimum, always replace friction material on both ends of an axle whenever one side is being serviced. For rear axles, it is recommended that friction material on all axles be replaced at one time.

With air disc brakes, the rotor-friction couple is carefully designed and validated for optimal performance. When replacing air disc brake pads, always select replacement pads that have been validated to perform with the rotor used, in order to prevent premature or uneven pad wear or damage to critical disc brake components (e.g. cracked rotors) which can adversely affect braking performance.

Brake Adjustment

One of the most important factors in obtaining maximum mechanical output of the chamber is proper brake adjustment. All chamber strokes should be adjusted to approximately the same stroke, and the adjustment should be made so that the chamber stroke is as short as possible without the brakes dragging. Improperly adjusted brakes waste air, reduce leverage and contribute to poor brake performance. In many cases, complaints of poor or insufficient braking power can be taken care of by proper brake adjustment.

Brake System Maintenance

Because no two vehicles operate under identical conditions, maintenance and maintenance intervals will vary. Experience is a valuable guide in determining the best maintenance interval for any one particular vehicle.

In Section 9, Air Brake System Troubleshooting, you will find some suggested tests for determining the overall condition of the air brake system and to help quickly locate problem areas. The tests check both leakage and device function. Performing these tests on a quarterly basis and recording the results of the tests in the vehicle maintenance records would provide a valuable basis for performance comparisons/trends and assist in deciding maintenance intervals.

Section 9: Air Brake System Troubleshooting Tests

Please follow all standard safety precautions, including, but not limited to, the general precautions listed on page 4 of this handbook.

TEST ONE

Governor cut-out / Low pressure warning / Pressure build-up

Vehicle parked, wheels chocked

		OK	Not OK
1.	Drain all the reservoirs to 0 psi.	☐	☐
2.	Start the engine and run at fast idle. The low pressure warning should be on. Note: on vehicles equipped with ABS, the warning lamp will also come on momentarily when the ignition is turned on. On some systems, such as the AD-IS® dryer system (illustrated), reservoirs may not fill simultaneously and one reservoir may fill to 110 psi before the other starts to fill.	☐	☐
3.	Low pressure warning; dash warning lamp should go off above 60 psi.	☐	☐
4.	Build up time; pressure should build from 85-100 psi within 40 seconds.	☐	☐
5.	Governor cut-out; cuts out at the correct pressure, usually 125-135 psi.	☐	☐
6.	Governor cut-in; reduce the service air pressure to governor cut-in. The difference between cut-in and cut-out pressure must not exceed 30 psi.	☐	☐

Make all the necessary repairs before proceeding to test 2; see checklist 1 for common corrections.

CHECKLIST ONE

If the low pressure warning lamp or buzzer doesn't come on:

1. Check the warning lamp wiring.
2. Check the warning lamp bulb.
3. Repair or replace the buzzer, bulb or low pressure warning switch(es).

If the governor cut-out is higher or lower than specified by the vehicle manual:

1. Repair, replace or adjust the governor as necessary after ensuring the compressor unloader mechanism is operating correctly.

If the low pressure warning occurs below 60 psi:

1. Check the dash gauge with test gauge known to be accurate.
2. Repair or replace the faulty low pressure indicator switch.

If the compressor build up time exceeds 40 seconds or is considerably greater than the permanent record figure:

1. Examine the compressor air inlet filter and inlet line checking for restrictions, damage or wear. Clean or replace the filter or inlet line as necessary.
2. Check the compressor discharge port and line for excessive carbon. Clean or replace the discharge line as necessary. If there is carbon, find the cause of the excessive heat.
3. With the system fully charged and governor in the unloaded mode, listen at the compressor inlet for leakage. If leakage can be heard, remove the unloaders and repair or replace as necessary.

Retest to verify proper operation of all items repaired or replaced.

TEST 2

Leakage (reservoir air supply)

For additional information refer to video Assessing Air Brake System Air Leakage (BW2327 - CD)

	Full pressure, engine stopped, parking brakes applied	OK	Not OK
1.	Allow the air pressure to stabilize for at least 1 minute.	☐	☐
2.	Observe the dash gauge pressures for 2 minutes and note any pressure drop.		
	A. Pressure Drop: Single Vehicle (A 4 psi drop within 2 minutes is allowable for either service reservoir)	☐	☐
	B. Pressure Drop: Tractor/Trailer (A 6 psi drop within 2 minutes is allowable for either service reservoir)	☐	☐
	C. Pressure Drop: Tractor/2 Trailers (An 8 psi drop within 2 minutes is allowable for either service reservoir)	☐	☐

Make all the necessary repairs before proceeding to test 3; see checklist 2 for common corrections.

CHECKLIST 2

If there is excessive leakage in the supply side of the pneumatic system, one or more of the following devices could be causing the problem:

NOTE: A leak detector or soap solution will aid in locating the faulty component.

1. Supply lines and fittings
2. Low pressure indicator(s)
3. Service brake relay valve(s)
4. Spring brake relay valve (where applicable)
5. Dual brake valve
6. Trailer hand control valve
7. Parking control valve
8. System safety valve(s) in the supply reservoir and/or air dryer
9. Governor (may be mounted on the air dryer as illustrated, on the compressor, or remotely).
10. Compressor discharge line

Retest to verify proper operation of all items repaired or replaced.

TEST 3

Pressure Modulator Valve and Traction Control Valve Chuff Test

Full pressure, engine stopped, parking brakes released

Make and hold brake application. When ignition power is applied, each modulator solenoid is briefly energized. If the air system is fully charged and the service brake pedal is depressed during ignition, the modulator creates a single, sharp audible “chuff” of air pressure. The modulators are energized in a certain pattern, as follows: right front, left front, right rear, left rear. This test is performed only when the vehicle is stationary (if the vehicle moves the chuff test will not be performed).

NOTE: The EC-60™ controller will perform a PMV chuff test on all installed modulators in the following order:

1. Steer Axle Right PMV
2. Steer Axle Left PMV
3. Drive Axle Right PMV
4. Drive Axle Left PMV
5. Additional Axle Right PMV
6. Additional Axle Left PMV
7. Drive Axle TCV

The pattern will then repeat itself.

See appropriate Service Data Sheet for repairs.

Make all necessary repairs before proceeding to Test 4.

TEST 4

Leakage service air delivery

Full pressure, engine stopped, parking brakes released

1. Make and hold brake application. This can be accomplished by using the BVA-85™ brake valve actuator. If the vehicle is not equipped with a BVA-85™ brake valve actuator, a block of wood can be used to hold the foot valve down during these tests.
2. Allow pressure to stabilize for 1 minute; then begin timing for 2 minutes while watching the dash gauges for a pressure drop.
   A. Pressure Drop: Single Vehicle (A 4 psi drop within 2 minutes is allowable for either service reservoir)
   B. Pressure Drop: Tractor/Trailer (A 6 psi drop within 2 minutes is allowable for either service reservoir)
   C. Pressure Drop: Tractor/2 Trailers (An 8 psi drop within 2 minutes is allowable for either service reservoir)
3. Check brake chamber push rod travel (refer to chart for allowable tolerances). With the parking brakes released and service brakes applied with 80 to 90 psi of air pressure in the service chambers.

Brake Chamber Size	Maximum Allowable Stroke	Maximum Allowable Stroke - Long Stroke
12	1-3/8"	1-3/4"
16	1-3/4"	2"
20	1-3/4"	2"
24	1-3/4"	2"
24 (max. stroke)	-	2½"
30	2"	2½"

4. Check the angle formed between the brake chamber push rod and slack adjuster arm. It should be approximately 90° in the applied position (80-90 psi) and the same across the axle.

Make all necessary repairs before proceeding to test 5; see checklist 4 for common corrections.

CHECKLIST 4

If there is excessive leakage in the service side of the pneumatic system, one or more of the following devices could be causing the problem.

NOTE: A leak detector or soap solution will aid in locating the faulty component.

1. Loose service lines and fittings
2. Trailer control valve
3. Stoplight switch
4. Brake chamber diaphragms
5. Tractor protection valve
6. Service brake relay valves
7. Dual brake valve
8. Inverting relay spring brake control valve (where applicable – usually found on spring brake relay valve) straight trucks and buses
9. Double check valve.

If the automatic slack adjuster is not adjusting, repair or replace to obtain desired setting.

CAUTION: If the brake chamber push rod travel exceeds the allowable stroke, then identify and fix the problem. DO NOT adjust and return to service!

Retest to verify proper operation of all items repaired or replaced.

TEST 5

Manual Parking Brake Operation

Full pressure, engine idling 600-900 rpm

FOR STRAIGHT TRUCKS, BUSES AND BOBTAIL TRACTOR:

1. Manually operate the park control, yellow button valve, and note that parking brakes apply and release promptly as the control valve button is pulled out and pushed in.

FOR TRACTOR/TRAILER COMBINATIONS:

1. Manually operate the tractor protection control valve (trailer supply valve usually red octagonal button). Note that trailer brakes apply and release promptly as the control button is pulled out and pushed in.
2. Manually operate system park control (usually yellow diamond button) and note all parking brakes (tractor and trailer) apply promptly.

Make all necessary repairs before proceeding to test 6; see Checklist 5 for common corrections.

CHECKLIST 5

If sluggish performance is noted in either test, check for:

1. Dented or kinked lines
2. Improperly installed hose fitting
3. A faulty quick release valve or spring brake control valve
4. Binding cam shafts or ungreased cam shaft bushings

If the trailer brakes do not actuate and the trailer supply line remains charged, check the:

1. Tractor protection control
2. Trailer spring brake valve
3. Binding cam shafts or ungreased cam shaft bushings

Retest to verify proper operation of all items repaired or replaced.

TEST 6

Dual circuit system integrity check (emergency braking) and/or Automatic application of the parking brake and /or Tractor protection valve operation

Full pressure, engine stopped, parking brakes released

1. Drain the front axle or secondary reservoir to 0 psi.
   A. The rear axle or primary reservoir should retain most of its pressure.
   B. On combination vehicles, the trailer air system should remain charged.
   C. Tractor and trailer brakes should not apply automatically.
2. With no air pressure in the front axle reservoir make a brake application.
   A. Rear axle brakes should apply and release when application is released.
   B. On combination vehicles the trailer brakes should also apply and release when application is released.
   C. The stop lamps should light and go off when the application is released.
3. Optional "Pop" Pressure Vehicle Test Procedure

[Note: Bendix is not aware of any federal legislation that specifies the pressure at which the YELLOW parking brake control valve must automatically "trip" to apply the vehicle parking brakes. This includes the Federal Motor Carrier Safety Regulations (FMCSR) for in-use vehicles, the CVSA out-of-service criteria, and the Federal Motor Vehicle Safety Standards (FMVSS) for newly manufactured vehicles. Although the "trip" pressure for the parking brake control valve is not stipulated for in-use or newly manufactured vehicles, a parking brake control valve "trip" pressure of 20-40 psi is currently (02/2009) specified as part of the Commercial Driver License in the CDL Manual. The CDL Manual is not consistent with the regulations cited above. See Bulletin TCH-03-051.]

   A. Install an accurate "shop standard" pressure gauge in the secondary service reservoir.
   B. Build pressure in the service reservoirs until the compressor cut-out is reached, shut the engine off.
   C. Open the manual drain valve on the primary service reservoir allowing the reservoir to drain completely.
   D. Open the secondary reservoir's manual drain valve creating a bleed rate of approximately 20-50 psi/min.
   E. Verify that the parking control automatically "pops".
4. For Towing Vehicles Only - Test the tractor protection valve feature
   A. Charge the air system to governor cut-out.
   B. Disconnect the service or control (blue) line to the trailer.
   C. Take care to restrain the service coupling and direct flow safely away while making and holding a full service brake application via the foot valve.
   D. As the service application is vented through the open gladhand the service system pressure drops until the tractor protection control (red) valve trips shutting off the leak through the open coupling.
   E. Record the pressure in the service reservoirs. Disconnect the trailer supply coupling to verify that the supply or emergency (red) coupling has been vented to atmosphere, thereby activating the trailer emergency feature.
5. Close the drain cocks, recharge system and drain rear axle, primary reservoir to 0 psi.
   A. The front axle reservoir should retain most of its pressure.
   B. On combination vehicles the trailer air system should remain charged.
6. With no air pressure in the rear axle reservoir, make and release a brake application.
   A. Front axle brakes should apply and release.
   B. On combination vehicles the trailer brakes should also apply and release.
   C. If the vehicle is equipped with a spring brake modulating valve, typically found on trucks, towing trucks and buses, the rear axle brakes should also apply and release by exhausting spring brake air.

Make all necessary repairs before proceeding; See checklist 6 for common corrections.

CHECKLIST 6

If the vehicle fails to pass the tests outlined, then check the following components for leakage and proper operation:

1. Fittings
2. Kinked hose or tubing
3. Pressure protection valves
4. Double check valves
5. Tractor protection valve
6. Tractor protection control valve
7. Parking control valve
8. Relay valves (antilock modulators)
9. Trailer spring brake control valve
10. Inverting relay spring brake control valve (optional) straight trucks and buses

Retest to verify proper operation of all items repaired or replaced.

Bendix Literature, DVDs and CDs available

Download many of these items now from www.bendix.com, or order paper copies etc. online from the Literature Center at bendix.com

The list shows a selection of many items available:

CD/DVD Offerings

Air Brake System CD with Workbooks BW1673-CD
Air Brake System DVD with Workbooks. BW1673-DVD
Air Brake System Workbook. BW1678
Bendix Air Brake System Training - DVD BW1957-DVD
Bendix Air Brake System Training - CD BW1957-CD
Air Leakage CD BW2327
Air Brake System Interactive Training CD BW2441
ABS/ATC/ESP Repair/Diagnostics CD. BW2538

Diagnostic Software

ACom™ Diagnostics for Windows CD. BW2329

Electronic Catalogs

Electronic Service Data Sheets CD BW2031
Friction Materials Catalog CD. AH-9705
I Parts Catalog CD AH-9754

Brochures, Ads & Flyers

Genuine Bendix Valves Brochure. BW2047
EverFlow® Air Dryer Module Sell Sheet BW2076
AD-9® System-Guard® Sell Sheet. BW2088
Dryer Reservoir Module Sell Sheet BW2096
Bendix Trailer Products Sell Sheet. BW2151
AD-IS® Air Dryer Sell Sheet BW2213
ES Wide Brake Sales Flyer BW7300
ES Brake Flyer BW7271
ESR Reduced Envelope Brake Flyer BW7319
XtraLife II S-Cam Brake Flyer. BW7284
ASA-5® Automatic Slack Adjuster Sell Sheet BW7295
SureStroke™ Indicator Sell Sheet BW7296
LMS™ Brake Package Sell Sheet BW7318

Catalogs, Service Manuals and Bulletins

Part Number Reference Book BW1010
Quick Reference Catalog English. BW1114
Quick Reference Catalog Spanish BW1115
Quick Reference Catalog French BW1116
Air Brake Handbook BW5057

BW1114 Quick Reference Catalog

BW2441 Interactive Training CD

BW2329 ACom™ Diagnostics for Windows

Air Parts Binder BW9100
Service Manual Binder BW9600
Brake Tool and Envelope BW7261
ESD-225 Illustrated Parts Guide BW7264
Air Disc Brake Illustrated Parts Guide Spanish BW7265
1999-90 Brake Application Catalog 8-1975C

Troubleshooting

Air Pressure Balance Pressure Tests Brochure BW1555
Compressor Oil Passing Troubleshooting BW1971

Wallcharts & Pads

Air Brake Expert Wallchart BW902
Air Brake System Wallchart (English/Spanish). BW1231ES
Air Brake System Wallchart (English/French) BW1231EF
Air Core Class Wallchart BW1299
Air Reman Exchange Core Class Mini Chart BW1330
Air Brake System Troubleshooting BW1396
Promo Bus Chart Pad. BW1397
Hydraulic Parts Core Chart. BW1659
Air Brake Component Wallchart BW1974
Vacuum Hydraulic Brake System Wallchart BW1398
Troubleshooting Vacuum Hydraulic Brake System Pad BW1399
Power Hydraulic Brake System Wallchart BW1611
School Bus Air Brake System Chart. BW1640

Additional

1-800 Card BW2272
ASA-5® Automatic Slack Adjuster Template BW1641
Mini Fold Out Brake Shoe and Lining. BW7244
Air Disc Brake Illustrated Parts Guide Spanish BW7265
Brake Shoe and Lining Poster BW7243

Bendix reserves the right to limit quantities and cannot guarantee availability.

Contact Bendix

For questions about troubleshooting, part number cross-reference, etc. call the Tech Team at 1-800-AIR-BRAKE or email TechTeam@bendix.com. See the Contacts area of www.bendix.com for contact information for Bendix dealers and distributors, Service Engineers, and Account Managers.

For ABS questions, please email ABS@Bendix.com.

For all other inquiries, please email info@bendix.com.

About Bendix Commercial Vehicle Systems LLC

We supply air brake charging and control systems and components, vehicle modules, and leading-edge safety technologies under the Bendix® brand name for medium- and heavy-duty trucks, tractors, trailers, buses and other commercial vehicles in North America, Europe and Australia. Employing more than 2,200 people, Bendix is headquartered in Elyria, Ohio, with manufacturing plants in the U.S., Canada and Mexico.

We are part of a global organization with technical and manufacturing centers worldwide, and remain on the leading edge of new product development and applications engineering.

Bendix products are backed by our TechTeam - a team of air brake experts who staff our 1-800-AIR-BRAKE (1-800-247-2725) hotline.

We also invite you to visit www.bendix.com for all the latest information on our products.

Our Service Engineers provide on- and off-site technical training, see the website for a list of current Training School dates and locations.

A Brief History of Bendix Commercial Vehicle Systems LLC

1869: Westinghouse Air Brake Company established in Wilmerding, Pa., to manufacture air brakes invented by George Westinghouse.

1924: Westinghouse air brake system (including Broussouse compressor) applied to International Harvester Coach in Akron, Oh.

1927: Bendix Corporation formed by automotive engineer Vincent Bendix. Company produces "Safety Servo" vacuum brake under the Braggs-Kliesrath name.

1930: Bendix-Westinghouse Automotive Air Brake Company established following the merger of Bendix Corp. and Westinghouse Automotive Air Brake. Headquarters located in Wilmerding, Pa.

1934: Bendix-Westinghouse takes automotive air brake worldwide by establishing licensing agreements with Westinghouse companies in France, Germany, Italy and England.

1941: Bendix-Westinghouse establishes new headquarters in Elyria, Oh.

1949: WWII accelerates developments, and air braking becomes standard on all heavy trucks, tractor-trailers, buses, fire trucks and off-highway vehicles.

1960: Automatic slack adjusters, air dryers, dual brake valves and first generation antilock braking systems are under development.

1969: Bendix Corporation acquires 100 percent ownership of Bendix-Westinghouse.

1973: Bendix-Westinghouse becomes Bendix Heavy Vehicle Systems Group, a division of Bendix Corporation.

1975: Bendix dual air brake system becomes standard for the National Highway Traffic Safety Administration's Federal Motor Vehicle Safety Standard (FMVSS) 121.

1980: Bendix establishes worldwide parts distribution center and remanufacturing operation in Huntington, In.

1982: Bendix Corporation merges with Allied Corporation and the division becomes an operating unit of Allied Automotive, an independent supplier to the worldwide automotive industry under the brand names of Bendix®, Fram® and Autolite®.

1986: The Bendix Heavy Vehicle Systems Group of Allied merges with Bendix Limited European truck air brake operation establishing Bendix Heavy Vehicle Systems Group-Europe. Allied Corporation acquires Signal operations establishing AlliedSignal Inc. as the division's parent company.

1989: Bendix Heavy Vehicle Systems Group-Europe acquires truck air brake operation of Magneti Marelli, strengthening European operations.

1999: AlliedSignal merges with Honeywell International. The new company continues to offer Bendix® brand name air brake and control systems and components under its Honeywell Commercial Vehicle Systems unit. Honeywell operates Honeywell Commercial Vehicle Systems as a joint venture with Knorr-Bremse AG of Munich, Germany. Honeywell owns 65 percent of the unit. Knorr-Bremse owns 35 percent.

2002: Knorr-Bremse assumes 100 percent ownership of Honeywell Commercial Vehicle Systems from Honeywell International Inc. The company changes its legal name to Bendix Commercial Vehicle Systems LLC.

2004: Bendix CVS & Dana Commercial Vehicle Products, LLC form wheel end joint venture, Bendix Spicer Foundation Brake.

2004: Bendix CVS introduces first ABS-based full stability system for commercial vehicles, Bendix® ESP.

2005: Bendix begins North American production of air disc brakes

2005: BSFB forms a strategic alliance with Gorilla Brake

2006: Bendix Spicer Foundation Brake acquires Di-Pro, Inc.

2007: BSFB opens manufacturing plant in Bowling Green, Kentucky.

2008: Bendix begins production of air disc brakes at the Bowling Green facility.

2008: Bendix CVS launches integrated vehicle module program for full cab assembly at Huntington, Indiana modules center.

Typical Tractor System Schematic with ESP® Stability

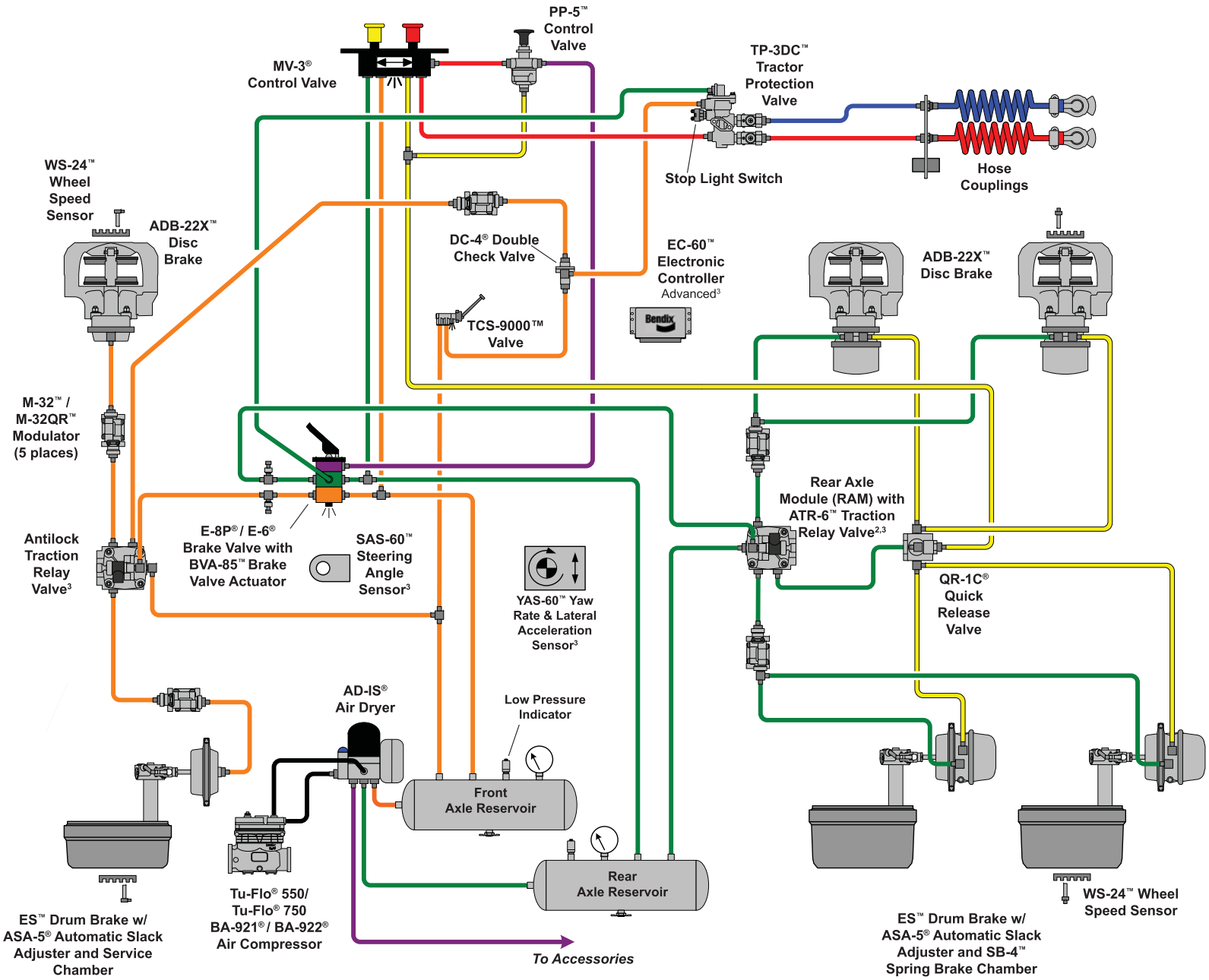

©2009 Bendix Commercial Vehicle Systems LLC • All Rights Reserved

Typical Truck System Schematic with ESP® Stability

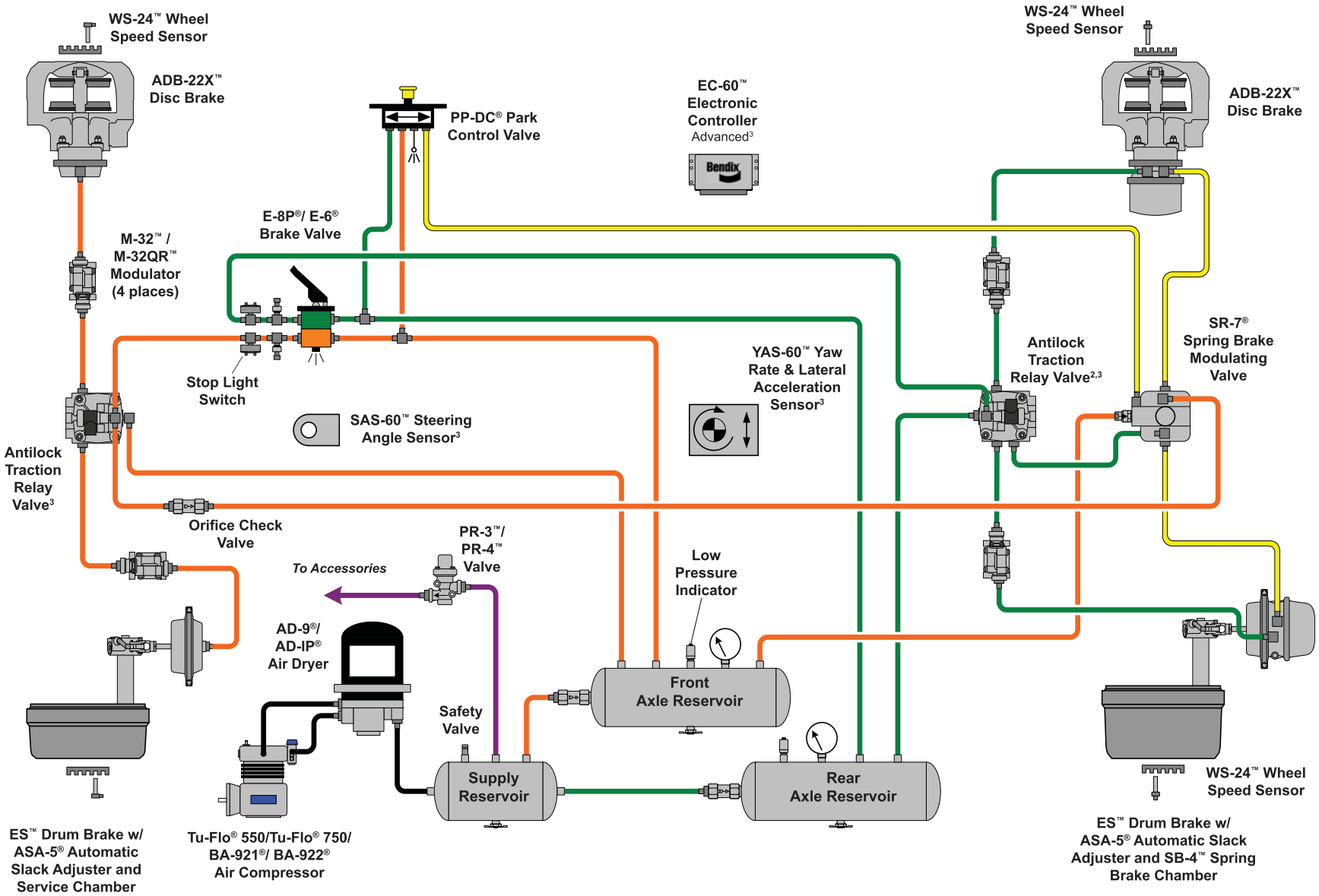

©2009 Bendix Commercial Vehicle Systems LLC • All Rights Reserved

Typical Truck System Schematic

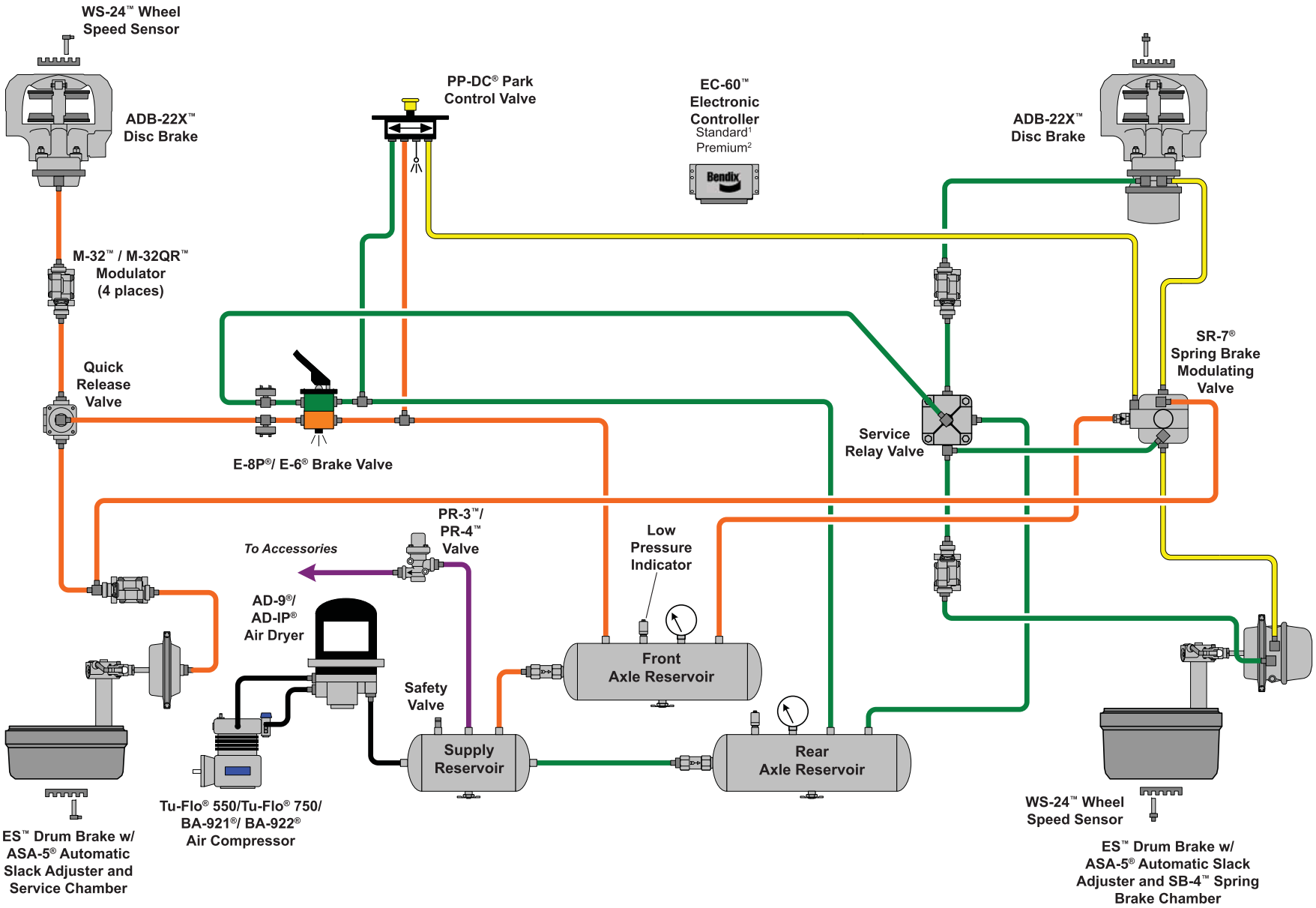

©2009 Bendix Commercial Vehicle Systems LLC • All Rights Reserved

Bendix Spicer Foundation Brake LLC
A Bendix CVS and Dana Joint Venture

Service Plants

Huntington
1850 Riverfork Drive West
Huntington, IN 46750
260.356.9720

Bowling Green
346 Central Avenue
Bowling Green, KY 42101
270.783.5000

Acuña
21 Finegan Drive
Del Rio, TX 78840
(01152877) 773-05-04

Vancouver
Suite 150
13151 Vanier Place
Richmond, British Columbia
Canada V6V 2J1
604-276-9884

Distribution Centers

Huntington
1850 Riverfork Drive West
Huntington, IN 46750
260.356.9720

Mexico City
Rio Lerma #108 ext. 2
Fracc. Ind. Tlaxcolpan
Tlalnepantla
Edo. de Mex.
54030
011 52 (55) 16 65 90 40

Montreal
8851 4e Croissant
Anjou, Quebec
H1J 1A9
514.323.0303

Sparks
1095 Spice Island Drive
Suite 101
Sparks, NV 89431
775.353.4255

---

901 Cleveland Street • Elyria, OH 44035 • 1-800-AIR-BRAKE • www.bendix.com

BW5057 • ©2009 Bendix Commercial Vehicle Systems LLC, a member of the Knorr-Bremse Group • All rights reserved • 2/09 Printed in U.S.A.